Panasonic®

Section 550
ISDN
Reference

(For UK)

05/15/98

Contents

About This Manual

Chapter 1. Introduction to ISDN and Related Cards 1-1

Chapter 2. Installation 2-1

Chapter 3. Quick-Start Programming 3-1

Chapter 4. Programming Reference 4-1

List of Tables

List of Figures

About This Manual

Overview

This manual provides an overview of the ICX ISDN Interface, along with installation and programming instructions. The following table summarizes each chapter contained in this manual.

Chapter	Title	Purpose
1	Introduction to the ISDN Interface	Provides an overview of the ICX ISDN Interface, plus information on pre-installation requirements.
2	Installation	Provides step-by-step instructions on installing the ICX ISDN hardware.
3	Quick-Start Programming	Summarizes the programs that are essential to ISDN installation.
4	Programming Reference	Contains a complete list of ISDN programming commands. Each command description includes a list of the available options and the associated programming addresses.

Related Documents

For general instructions on ICX hardware installation, see the Installation Manual (Section 300). For an introduction to ICX programming, see the Programming Manual (Section 400).

Related Standards

BRI :ITU-T I.430
ITU-T Q.920
ITU-T Q.921

PRI :ITU-T I.431
ITU-T Q.920
ITO-T a.921

Chapter 1. Introduction to ISDN and Related Cards

This chapter provides an overview of ISDN and to the required cards and their specifications.

Introduction to ISDN

ISDN (Integrated Services Digital Networks) are networks that permit the digital communication of different forms of data such as voice (telephone) and facsimile.

ISDN is standardized by the International Telecommunication Union-Telecommunication Standardization Sector (ITU-T). The ICX is compatible with the following two ISDN Interface:

1) BRI (Basic Rate Interface)

   The BRI consists of "**2B+D**" channels (**B: 64kbps** data channel; **D: 16kbps** signal channel). This interface is capable of simultaneous transmission of the information of two analog lines.

2) PRI (Primary Rate Interface)

   The PRI consists of "**30B+D**" channels (**B: 64kbps** data channel, **D: 16kbps** signal channel). This interface is capable of simultaneous transmission of the information of two analog lines.

   The 64kbps B channels can also be used for **H0** communications (**384kbps**) data channels, which use 6 B channels, and **H12** communications (**1,984kbps**) data channels, which use 30B channels. The H0 and H12 communications channels are used mainly for TV conferencing.

In case of T-point interface, signal channels are connected via **DSU** (Digital Service Unit).

Signal channels between the network and the DSU are connected via metallic cable (2-lead copper wire) or optical fiber cable, while signal channels between the DSU and the Interface Card are connected by 8-pin moduler connector.

Two or more PBXs (ICX) can be connected via either of these two types of ISDN network to create a wide-area network service.

Figure 1-1. Example ISDN Connections

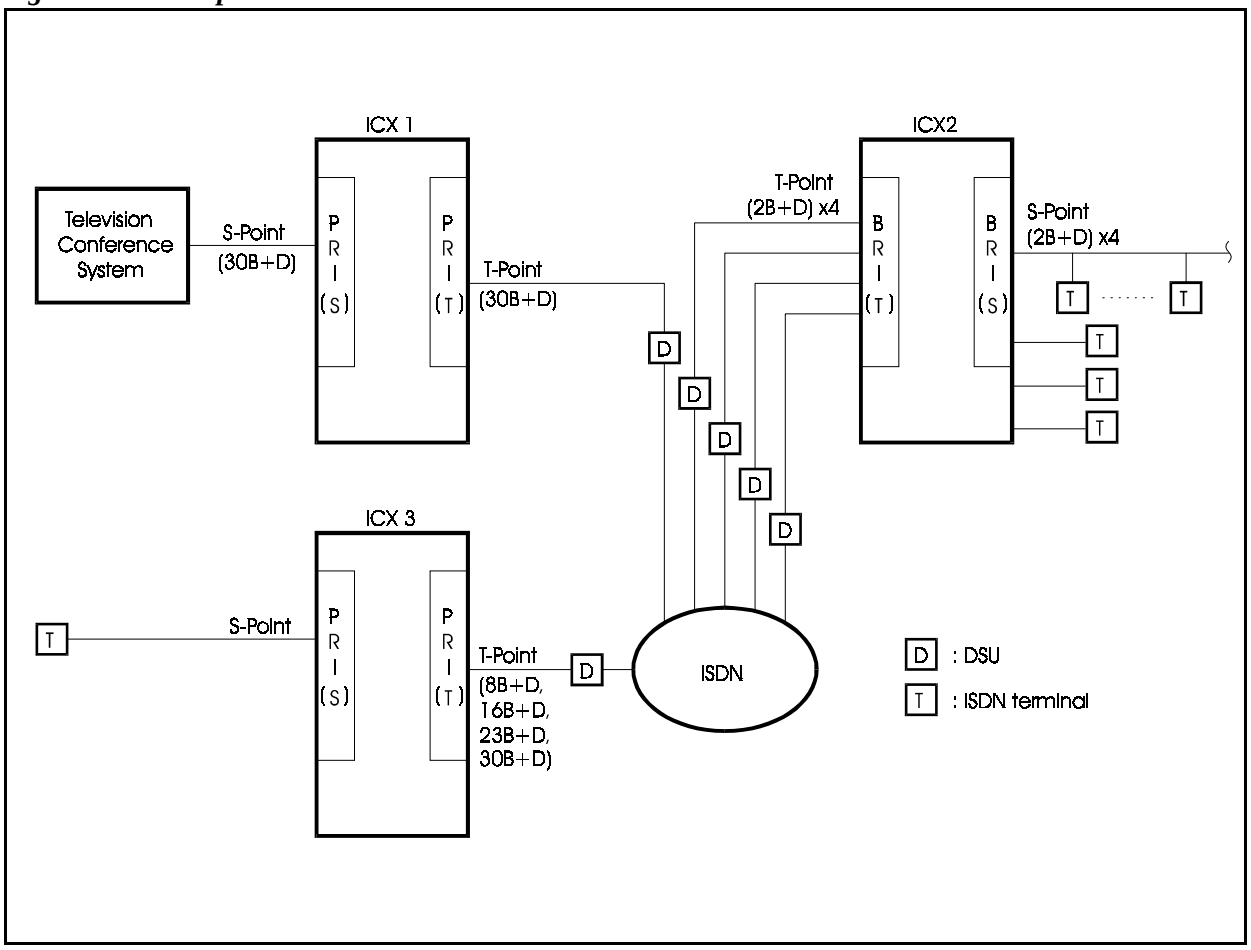

ISDN-Related Cards

Table 1-1 shows the ISDN cards for use with the ICX.

Table 1-1. ISDN Cards

Card Designation	Name	Model Number	Remarks
BRI card (T-Point)	TBRI/4	VB-44530	T-Point ISDN interface (2B+D) channels
BRI card (S-Point)	SBRI/4	VB-44630	S-Point ISDN interface (2B+D) channels
PRI card	PRI/30	VB-44540UK	• T-Point/S-Point switch • 1 ISDN interface (30B+D) channels
Sync. Package for Network Unit	SYNC	VB-44460UK	Installed on CPC96, TSW288, or TSW576 card

T-Point ISDN Interface

The following describes the T-Point ISDN Interface, which replaces analog outside lines.

Card Overview

There are two cards that accommodate the T-Point ISDN Interface: the TBRI/4 card and the PRI/30 card. The latter card (PRI/30) is set for use with the T-Point ISDN interface by setting the DIP switch (SW2-1) to T-Point (outside line) to accommodate the T-Point ISDN interface (see page 2-8).

- **TBRI/4 card**

  This card is for the Basic Rate Interface (BRI). It houses four "2B+D" interfaces.

- **PRI/30 card**

  This card is for the Primary Rate Interface (PRI). It houses one ISDN interface of up to "30B+D".

  The PRI/30 card can be set using DIP switch SW2-2 (see page 2-8) for "8-channel mode" or "Other mode". When set for "Other mode", you can also specify two channel classifications: "1 to 16B+D", "1 to 24B+D" or "1 to 30B+D"

- Table 1-2 shows the T-Point ISDN interface specifications for each card.

Table 1-2. T-Point ISDN Interface Specifications of Cards

Interface	**Card Name/ Switch Setting Mode**	**Card Assignment/ No. of Channels Used**
BRI (Basic Rate Interface)	TBRI/4 card	TBRI: 2B+D
PRI (Primary Rate Interface)	PRI/30 card (8ch mode)	PRIT/8: 1 to 8B+D
	PRI/30 card (Other mode)	PRIT/16: 1 to 16B+D
		PRIT/24: 1 to 24B+D
		PRIT/30: 1 to 30B+D

Note: The ICX can accommodate a maximum of 8 communication channels per flexible slot. If you set the number of channels to 9 or more, there is a limit of the number of cards that can be installed in other slots (see page 1-16).

Connection Methods

There are two methods of connecting to an ISDN : Point-to-Point, and Point-to-MultiPoint.

- **Point-to-Point**

  The ISDN and PBX T-point are paired.

  This connection is available in both BRI and PRI.

- **Point-to-MultiPoint**

  Multiple ISDN Terminals can be connected to each ISDN network T-point.

  Although this connection is available in BRI, it is not common to use Point-to-MultiPoint connections of PBXs to other equipment using the T-point ISDN interface.
  This connection is NOT available in PRI.

Communication Modes

There are three communication modes:

- **1B** channel communication

  Communication is made via the 1B channel of TBRI/4 or PRI/30 cards. This 1B communication enable to make conversation and to communicate with G4 facsimile and other terminals using the 1B channel.

- **H0 (6B)** channel communication

  Communication is made via 6B channels of PRI/30 card all together. This H0 channel communication enable to make TV conference and other terminals using the 6B channel.

- **H11 (24B)** channel communication

  Communication is made via the 30B channel of the PRI/30 card. H12 communication enable to make TV conference and other terminals using the 24B channel.

Network Synchronization

In order to connect T-point of an ISDN, the system clock must be synchronized at Network.

When multiple ISDN lines are connected to a network, synchronization is established using line of ISDN and the system clock of ICX. Only one ISDN line to which an ICX is connected is required for synchronization.

Note the following points related to the synchronization of the ISDN T-point and ICX system clock:

- By program setting, you can select maximum of three lines of ISDN T-point interface for network synchronization. These three lines must be synchronized to one of these.
- If none of the three selected to be synchronized to one of T-point interface, the system remains unsynchronized and operates using the system clock only.
- If the maintenance switch (see page 1-18) is set to turn off a card, the T-point interface on that card is excluded from network synchronization (at this moment, the lit SYNC LED turns OFF). Synchronization is then established using a T-point interface selected on another card (corresponding SYNC LED turns ON).

With the ICX, you can install the SYNC network synchronization package on CPC96, TSW288, or TSW576 cards to synchronize the system clock with the ISDN T-point .

Functional Differences with Analog Exchange Line

The following describes functional differences between analog line and ISDN line.

There are five ring types.

In case of Analog exchange line, programmed ring type has a priority.

Although, in case of ISDN exchange line, ring type is effected by the originated call type (DDI number and sub-address number is available or not).

The following table 1-3 shows the priority to ring under the condition with the programming and whether the call originator send DDI number and sub-address number.

Table 1-3. Ring Priority Table.

<originator> DDI.No.	<ICX> Programming	<originator> sub-address	<ICX> operation
DDI call	→	→	DDI
Non-DDI call	Multiple Incoming	sub-address	sub-address
		No sub-address	Multiple Incoming
	DISA	→	DISA
	DIL	→	DIL

- **Incoming calls to key phone**

  Digital data communication cannot be directed to key phones. Calls can, however, be directed to key phones in analog communications, such as normal phone calls or modem.

- **DDI incoming calls**

  Digital data communication is possible with DDI by specifying the digital data communication terminal as the call destination. If a call is directed to a DDI, the LED on the exchange line key on the key phone lights red, and the call cannot be answered by any other telephone.

- **DISA incoming calls**

  Digital data communication is possible with DISA by specifying the digital data communication terminal as the call destination. If a call is directed to a DISA, the LED on the exchange line key on the key phone lights red, and the call cannot be answered by any other telephone.

  However, because a DTMF signal must be sent after the connection is established, digital data communication with DISA is not available. (In case of outgoing call from digital terminal equipment)

- **DIL incoming calls**

  Digital data communication is possible with DIL by specifying the digital data communication terminal as the call destination. If a call is directed to a DIL, the LED on the outside line key on the key phone lights red, and the call cannot be answered by any other telephone.

- **Sub-address**

  This is a feature specific to ISDN. By adding subaddresses (such as extension numbers) to dialling number, you can specify the call destination.

  For example, to call extension "300" at remote destination number "1234-

5678", extension "300" at the remote telephone can be directly called if you dial "1234-5678*300", adding the extra after outside line number. "*" indicates that all following numbers are sub-addresses.
Same as DIL, you can also specify closed numbering and group hunts as its call destination.
When DDI, DISA or DIL is set to a remote call destination, this specified destination takes a priority, instead of sub-address.
In case of sub-address incoming, the LED on the exchange line key on the key phone lights red, and the call cannot be answered by any other telephone.

- **Call number display when calling**

When a call originates from a T-point, the caller's number (max. 16 digits) can be sent to the other party. If the other party has the facility to display the caller's number, it can be displayed.
Also, when a call originates from a telephone which is set to DDI, by program setting, DDI number inverse conversion is carried out based on the information in the DDI table so that the last several digits of the DDI telephone number are converted and send to the other party. When DDI number inverse conversion is not carried out, the telephone number set to the T-point is sent to the other party.

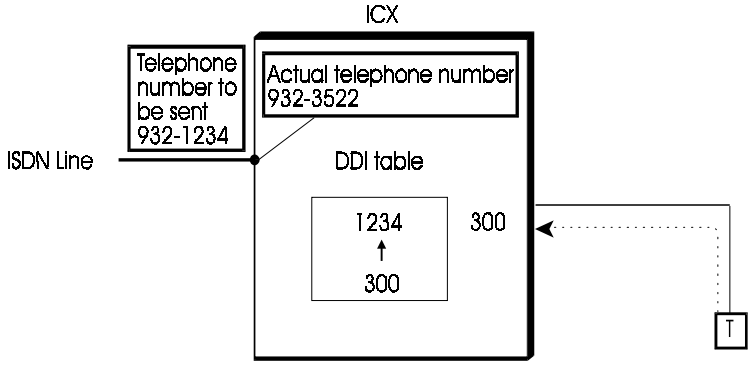

- **Display of caller information when receiving call**

When receiving a phone call at a T-point, up to 11 digits of caller information can be displayed on the LCD of the key phone. Note that the information is displayed according to the following levels of priority:

Priority 1: Display of caller's telephone number

Priority 2: Display of programmed exchange line name

Priority 3: Display of allocated exchange line number

Notes: If the receiving digits are more than 12 digits, Priority 1 will be skipped.

S-Point ISDN Interface

The following describes the S-Point ISDN Interface, which replaces analog extensions.

Card Overview

There are two cards that accommodate the S-Point ISDN Interface: the SBRI/4 card and the PRI/30 card. The latter card (PRI/30) is set for use with the S-Point ISDN interface by setting the DIP switch (SW2-1) to S-Point (extension side) to accommodate the S-Point ISDN interface (see page 2-14).

- **SBRI/4 card**

  This card is for the Basic Rate Interface (BRI). It houses four "2B+D" interfaces.

- **PRI/30 card**

  This card is for the Primary Rate Interface (PRI). It houses one ISDN interface of up to "30B+D".

  The PRI/30 card can be set using DIP switch SW2-2 (see page 2-14) for "8-channel mode" or "Other mode". When set for "Other mode", you can use: "1 to 30B+D" channels.

Table 1-4 shows the S-Point ISDN interface specifications for each card.

Table 1-4. S-Point ISDN Interface Specifications of Cards

Interface	**1/ Card Name/ Switch Setting Mode**	**Card Assignment/ Number. of Channels Used**
BRI (Basic Rate Interface)	SBRI/4 card	SBRI: 2B+D
PRI (Primary Rate Interface)	PRI/30 card (8ch mode)	PRIS/8: 1 to 8B+D
	PRI/30card (Other mode)	PRIS/30: 1 to 30B + D

Note: The ICX can accommodate a maximum of 8 communication channels per flexible slot. If you select "Other mode", there is a limit of the number of cards that can be installed in subsequent slots. (see page 1-16)

Connection Methods

There are two methods of connecting to an ISDN terminal: Point-to-Point, and Point-to-MultiPoint.

- **Point-to-Point**

  PBX S-point and extension terminal are paired.
  Connection is available in both BRI and PRI.

- **Point-to-MultiPoint**

  Multiple extension terminals can be connected to each ISDN network S-point.
  Connection is available in BRI.

Communications Modes

There are three communication modes:

- **1B channel** communication

  Communication is made via the 1B channel of TBRI/4 or PRI/30 cards. This 1B communication enable to make conversation and to communicate with G4 facsimile and other terminals using the 1B channel.

- **H0 (6B)** channel communication

  Communication is made via 6B channels of PRI/30 card all together. This H0 channel communication enable to make TV conference and other terminals using the 6B channel.

- **H12 (30B)** channel communication

  Communication is made via the 30B channel of the PRI/30 card. H12 communication enable to make TV conference and other terminals using the 30B channel.

Functional Differences with Key phone

Table 1-5 shows which dialled functions available to push-button telephones can be used from terminals connected to ISDN S-point channels.

Table 1-5. Differences Between ISDN Terminals and Key phones
(○: OK, ×: NG, △: See Remarks)

Function	OK/NG	Remarks
Speed Dial Originate	△	System Speed dialing only
Speed Dial Set	×	
Speed Dial Confirm	×	
Redial	×	
Pooled Exchange Line Access (MCO1-5)	○	
Specified Exchange Line Access	×	
Verified Account code	○	
Message Waiting Set	○	
Message Waiting Cancel	×	
Message Waiting Callback	×	
Cancelling Priority message Wait by other extension	○	
C.F. (Call Forward) All Calls Set	×	
C.F. All Calls Cancel	×	
C.F. All Calls Set by Other Ext.	○	
C.F. All Calls Cancel by Other Ext.	○	
C.F. No-answer Set	×	
C.F. No-answer Cancel	×	
C.F. No-answer Set by Other Ext.	○	
C.F. No-answer Cancel by Other Ext.	○	
C.F. On Busy Set	×	
C.F. On Busy Cancel	×	
C.F. On Busy Set by Other Ext.	○	
C.F. On Busy Cancel by Other Ext.	○	
DND (DO NOT DISTURB) Set/Cancel	×	
DND Set by Other Ext.	○	
DND Cancel by Other Ext.	○	
DND & C.F. Cancel	×	
DND Override	○	
Time Reminder Set	×	
Time Reminder Cancel	×	
BGM Start/Stop	×	
Day/Night Mode Set	○	
Day 2 Mode Set	○	
Night 1 Mode Set	○	

Function	OK/NG	Remarks
Night 2 Mode Set	○	
Paging Meet me answer	×	
Paging	×	
Call Pickup	○	
Specified Group Call Pickup	○	
Direct Call Pickup	○	
MCO Incoming call Auto-answer (Within a tenant)	○	
MCO Incoming call Auto-answer (All tenants)	○	
Specified Floating Hold Answer	×	
Specified Exchange Line Answer	×	
Account Code Set	×	
Voice Mail ID Code Set	×	
3 Parties Conference	×	
8 Parties Conference	×	
Hold	×	

- S-Point DDI calls

  In case of a point-to-multipoint connection, you can receive calls at a specific extension. However, the following conditions are applied.

  There are following two conditions;

  - Condition 1: The ICX must be programmed to match the number of each terminal with the extension number.
  - Terminal number: This number is sent to and identified by the terminals when the call is received (4 digits max.).
  - Extension number: One extension number is assigned to one interface number (2B+D or 30B+D).
  - Condition 2: Called Number Indication must be programmed by each extension basis.

Figure 1-2. Schematic of S-Point DDI Calls

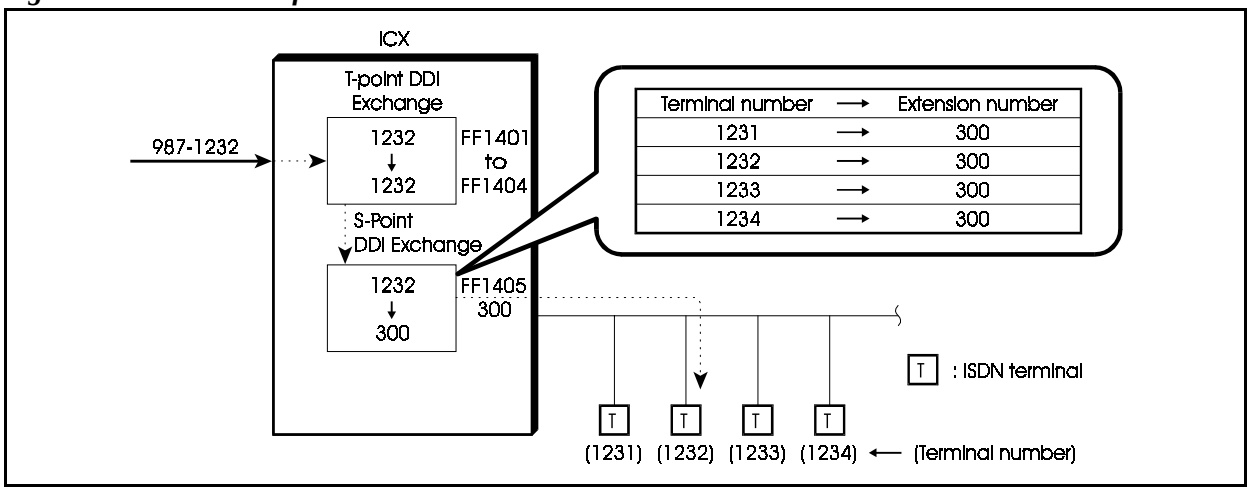

Notes on Card Installation Position

The ICX can accommodate a maximum of 8 communication channels per flexible slot. If you set the number of channels to 9 or more, two or more flexible slots are required for one card, and you will not be able to use these slots for cards.

Table 1-6 shows slot restrictions depending on the number of set channels. Figures 1-3 to 1-5 show the positions that can be used for installing cards in the respective CCUs.

Do not attempt to install cards in slots that cannot be used.

Table 1-6. Card Installation Positions

Card Name/ Switch Setting Mode		Card Assignment/ Number of Available Channels	Card Installation Position	Unavailable Slots		
				FS1 Installed	FS5 Installed	FS9 Installed
T-Point I/F	TBRI/4 card	TBRI: 2B+D	FS1 to FS12	No restriction		
	PRI/30card (8ch mode)	PRIT/8: 1 to 8B+D	FS1 to FS12	No restriction		
	PRI/30 card (Other mode)	PRIT/16: 1 to 16B+D	FS1, FS5, or FS9 only	FS2	FS6	FS10
		PRIT/24: 1 to 24B+D		FS2, FS3	FS6, FS7	FS10, FS11
		PRIT/30: 1 to 30B+D		FS2 to FS4	FS6 to FS8	FS10 to FS12
S-Point I/F	SBRI/4 card	SBRI: 2B+D	FS1 to FS12	No restriction		
	PRI/30 card (8ch mode)	PRIS/8: 1 to 8B+D	FS1 to FS12	No restriction		
	PRI/30card (Other mode)	PRIS/30: 1 to 30B+D	FS1, FS5, or FS9 only	FS2 to FS4	FS6 to FS8	FS10 to FS12

Figure 1-3. Card Installation in Flexible Slots of CAB40

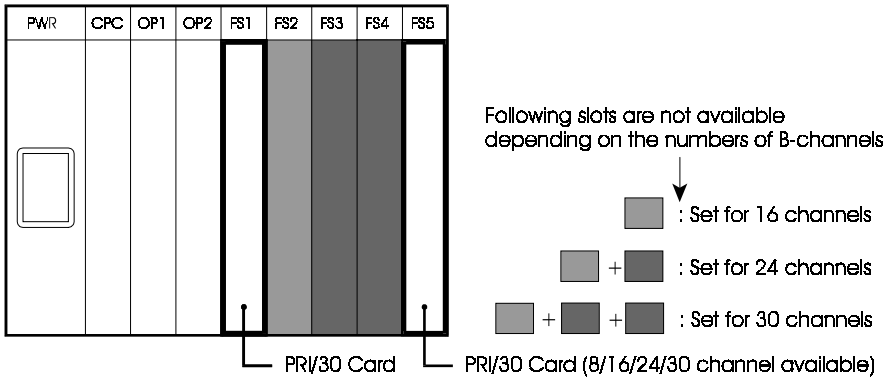

Figure 1-4. Card Installation in Flexible Slots of CAB96 and CAB96B

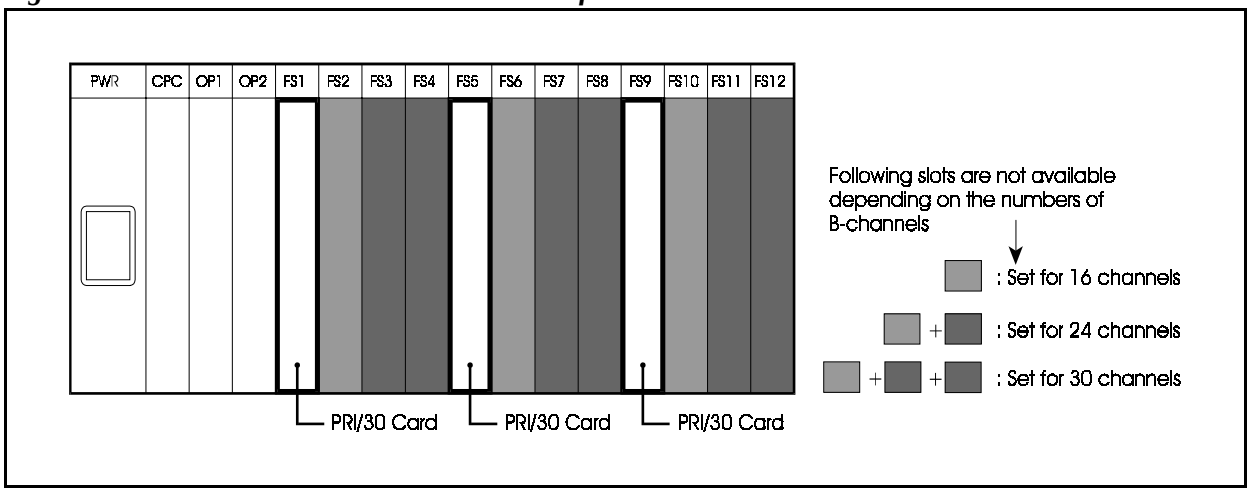

Figure 1-5. Card Installation in Flexible Slots of CAB40×2

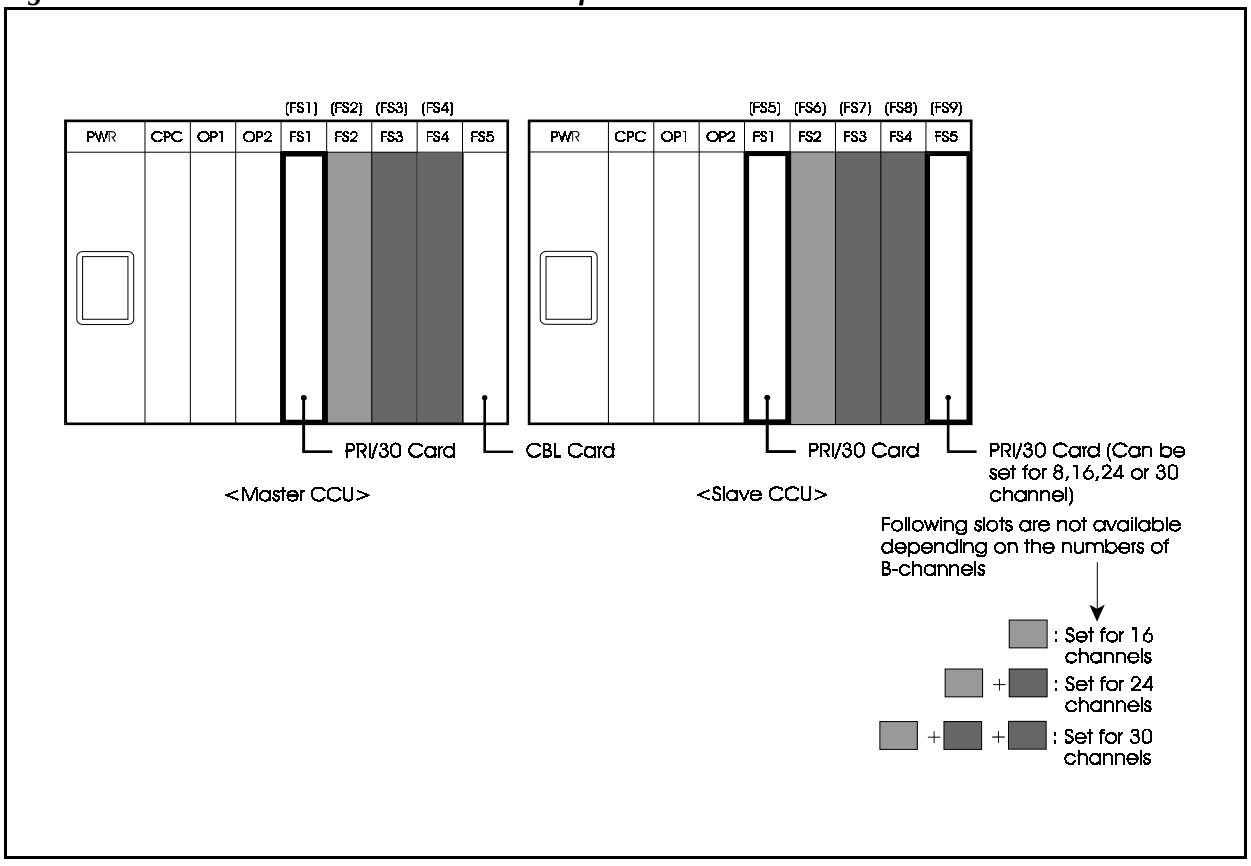

Maintenance Switches

Caution :

- Check that the Busy LED is OFF before removing a card. If the card is removed while the Busy LED is ON, the communication in use will be disconnected.
- After reinstalling a card on completion of maintenance, make sure that the maintenance switch is set OFF.

The TBRI/4 card and PRI/30 card can be removed and reinstalled in the flexible slot even when the system is operating (Main power SW is ON) by setting the maintenance switch ON.

When the maintenance switch is ON, calls cannot be made or received by the channels on that card. Also, any busy channel will be unable to receive or make further calls on completion of the current call.

When the Busy LED is ON, the channel is busy. Though the card can be removed, the current call will be cut.

Figure 1-6. Maintenance Switch Settings

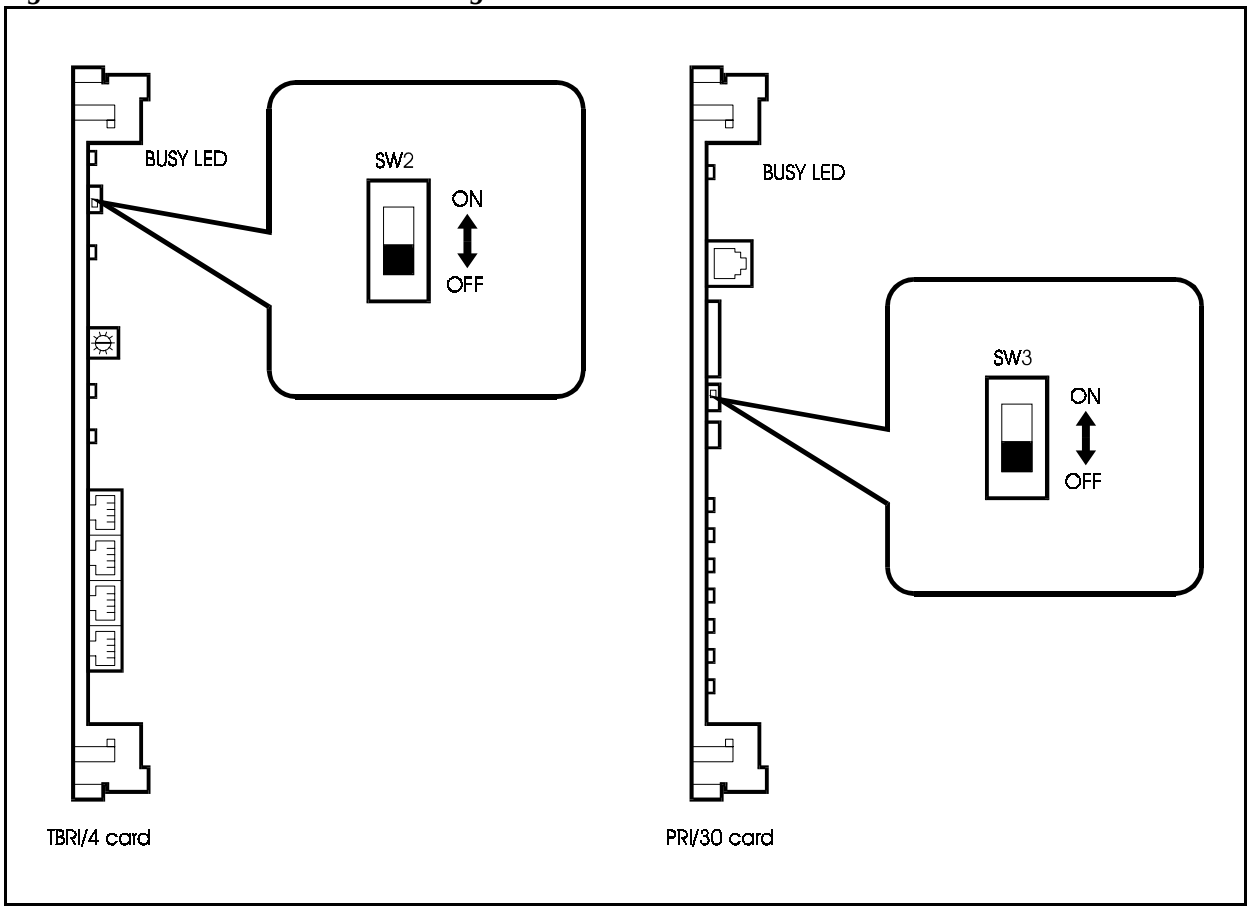

There are no maintenance switches or Busy LEDs on the SBRI/4 card. The card can be removed and reinstalled while the system is operating (power ON).

However, please notify any user of extensions which is currently connected to that card before it is removed.

Chapter 2. Installation

Chapter 2 provides step-by-step instructions on installing the ICX ISDN interface cards.

ISDN Interface Cards

The following cards are available for ISDN connections (see Table 1-1 on page 1-3 for details).

- TBRI/4 card (VB-44530)
- SBRI/4 card (VB-44630)
- PRI/30 card (VB-44540UK)
- SYNC Package (VB-44460UK)

Install the correct card for the type of ISDN system to which you will connect, then connect to the ISDN lines.

The following describes the methods of connection for each type of ISDN.

T-Point ISDN Interface (TBRI)

Guidelines

- T-point ISDN is accommodated by the TBRI/4 card. Four T-point ISDN lines can be connected to each TBRI/4 card.
- T-point ISDN is connected via DSU.
- T-point ISDN is connected to the TBRI/4 card using 8-pin modular connectors. For details on the pin arrangement of the 8-pin modular connector, see Figure 2-2.
- When using T-point ISDN, you must install the SYNC network synchronization package on a CPC96, TSW288, or TSW576 card.
- Table 2-1 shows the maximum number of cards that can be installed in each system size.

Table 2-1. Maximum Number of T-Point ISDN Interfaces per System

System Type	**MaximumCards**	**Maximum No. of ISDN/ (channel numbers)**
40 ports (CAB40 × 1)	5	20/(40ch)
72 ports (CAB40 × 2)	9	36/(72ch)
96 ports (CAB96 × 1)	12	48/(96ch)
192 ports (CAB96 + CAB96B)	24	96/(192ch)
288 ports (CAB96 + CAB96B × 2)	36	144/(288ch)
384 ports (CAB96 × 2 + CAB96B × 2)	48	192/(384ch)
480 ports (CAB96 × 2 + CAB96B × 3)	60	240/(480ch)
576 ports (CAB96 × 2 + CAB96B × 4)	72	288/(576ch)

- The use of each interface condition can be displayed on the LED depending on setting of rotary switch (SW1) on the TBRI/4 card. Table 2-2 shows the settings.

Table 2-2. Channel Selection Switch (SW1) on TBRI/4 Card

Switch Setting	Function
0	OFF (default setting when unit is shipped)
1	1st interface condition displayed by LAYER1 LED and LAYER2 LED
2	2nd interface condition displayed by LAYER1 LED and LAYER2 LED
3	3rd interface condition displayed by LAYER1 LED and LAYER2 LED
4	4th interface condition displayed by LAYER1 LED and LAYER2 LED
5 to 9	OFF

Installation

1. Align the CN8 connector of the CPC96 card or the CN5 connector of the TSW288 or TSW576 card with the holes of spacers and connect the SYNC network synchronization package.

Figure 2-1. Installation of SYNC Package (Example: Installation on TSW288 Card)

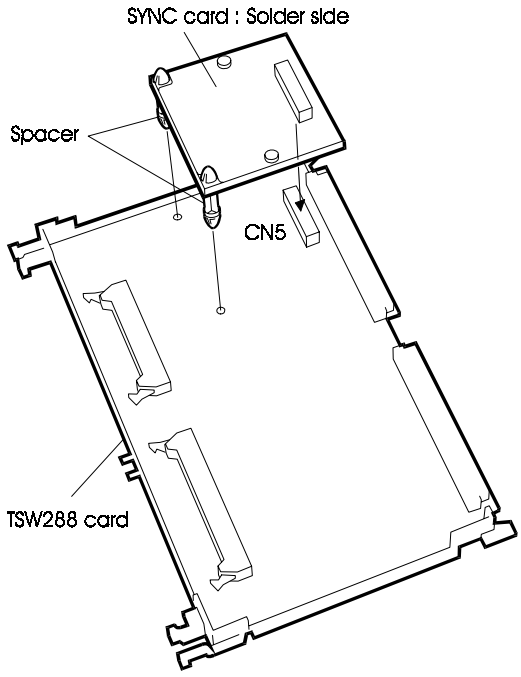

2. Insert the CPC96, TSW288, or TSW576 card in the specified slot.
3. Insert the TBRI/4 card in an available flexible slot.
4. Connect the 8-pin modular jack (RJ48) via the DSU to the T-point ISDN interface.
5. Pass the T-point ISDN wires with 8-pin modular jack through the wiring aperture in CCU and connect it to the modular connector on the TBRI/4 card.

Figure 2-2. Connection of T-Point ISDN Interface (TBRI)

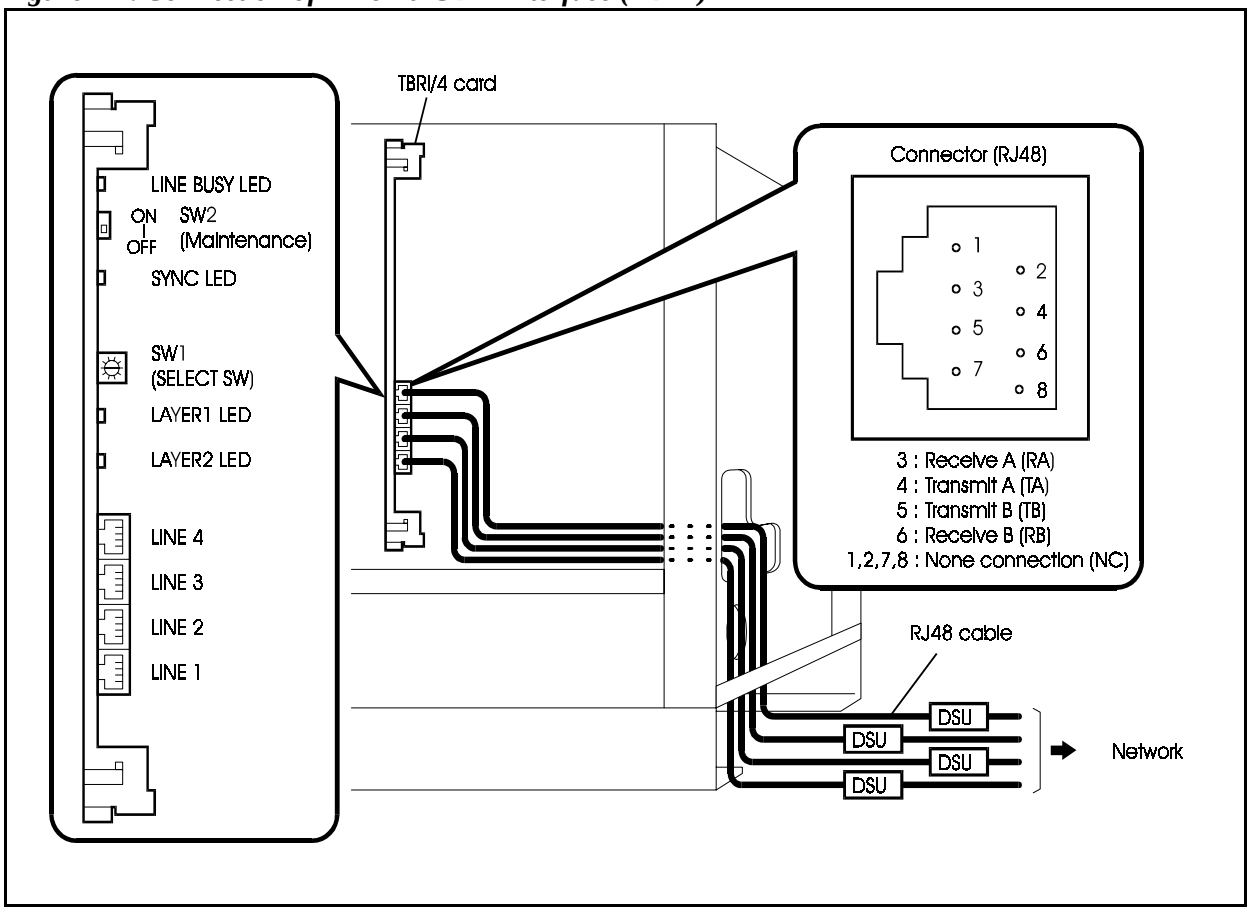

T-Point ISDN Primary Rate Interface (PRI)

Guidelines

- The T-point ISDN primary rate interface is accommodated on the PRI/30 card. You can connect one T-point ISDN primary rate interface line to each PRI/30 card.
- The PRI/30 card switches can also be set for use as an S-point ISDN primary rate interface (see page 2-13).
- Via the DSU, the T-point ISDN primary rate interface can be accommodated.
- Depending on DIP switch SW2-2, the PRI/30 card can be set for "8-channel mode" or "Other mode". When set for "Other mode", you can also specify two channel classifications: "1 to 16B+D", "1 to 24B+D" or "1 to 30B+D" by programming.

  Table 2-3 shows the mode settings of the PRI/30 card.

Table 2-3. Mode Settings of PRI/23 Card

Card Name	**Switch Setting Mode**	**Card Assignment/ No. of Channels Used**
PRI/30 card (Primary Rate Interface)	8ch mode	PRIT/8: 1 to 8B+D
	Other mode	PRIT/16: 1 to 16B+D
		PRIT/24: 1 to 24B+D
		PRIT/30: 1 to 30B+D

- The ICX can accommodate a maximum of 8 communication channels per flexible slot. If you set the number of channels to 9 or more, there is a limit of the number of cards that can be installed in other slots (see page 1-16).
- The T-point ISDN primary rate interface line uses an 8-pin modular connector, and is connected to the PRI/30 card. For details on the pin arrangement of the 8-pin modular connector (RJ48), see Figure 2-3.
- When installing a T-point ISDN primary rate interface, install the SYNC synchronization package on the CPC96, TSW288, or TSW576 card.
- Table 2-4 shows the maximum number of T-point ISDN primary rate interfaces that can be installed in each system size.

Table 2-4. Maximum Number of T-Point ISDN Primary Rate Interface Cards per System

System Type	Maximum Cards (available flexible slot positions)	Maximum No. of ISDN/(channels)
40 ports (CAB40 × 1)	2/(1, 5)	2/(60ch)
72 ports (CAB40 × 2)	3/(1, 5, 9)	3/(90ch)
96 ports (CAB96 × 1)	3/(1, 5, 9)	3/(90ch)
192 ports (CAB96 + CAB96B)	6/(1, 5, 9 × 2)	6/(180ch)
288 ports (CAB96 + CAB96B × 2)	9/(1, 5, 9 × 3)	9/(270ch)
384 ports (CAB96 × 2 + CAB96B × 2)	12/(1, 5, 9 × 4)	12/(360ch)
480 ports (CAB96 × 2 + CAB96B × 3)	15/(1, 5, 9 × 5)	15/(450ch)
576 ports (CAB96 × 2 + CAB96B × 4)	18/(1, 5, 9 × 6)	18/(540ch)

Installation

1. Align the CN8 connector of the CPC96 card or the CN5 connector of the TSW288 or TSW576 card with the holes of spacers and connect the SYNC synchronization package. See Figure 2-1 on page 2-5 for how to install the SYNC synchronization package.

2. Insert the CPC96, TSW288, or TSW576 card in the specified slot.

3. Set the DIP switch (SW2-1) of the PRI/30 card ON (outside line).

4. Set the DIP switch (SW2-2) of the PRI/30 card as shown in Table 2-5.

Table 2-5. Switch Setting for SW2-2 on PRI/30 Card

Switch No.	Function	
SW2-2	ON	Set to "Other mode". Can be used with channels in the programmed channel (1 to 16B+D, 1 to 24B+D or 1 to 30B+D) classifications.
	OFF	Set to "8-channel mode". Can be used with 1 to 8B + D channels.

5. Insert the PRI/30 card into the specified flexible slot (see page 1-16).

6. Connect the 8-pin modular jack (RJ48) via the DSU to the T-point ISDN primary rate interface line.

7. Pass the T-point ISDN wires with 8-pin modular jack through the wiring aperture of the CCU and connect it to the modular connector on the PRI/30 card.

Figure 2-3. Connection of T-Point ISDN Primary Rate Interface (PRI)

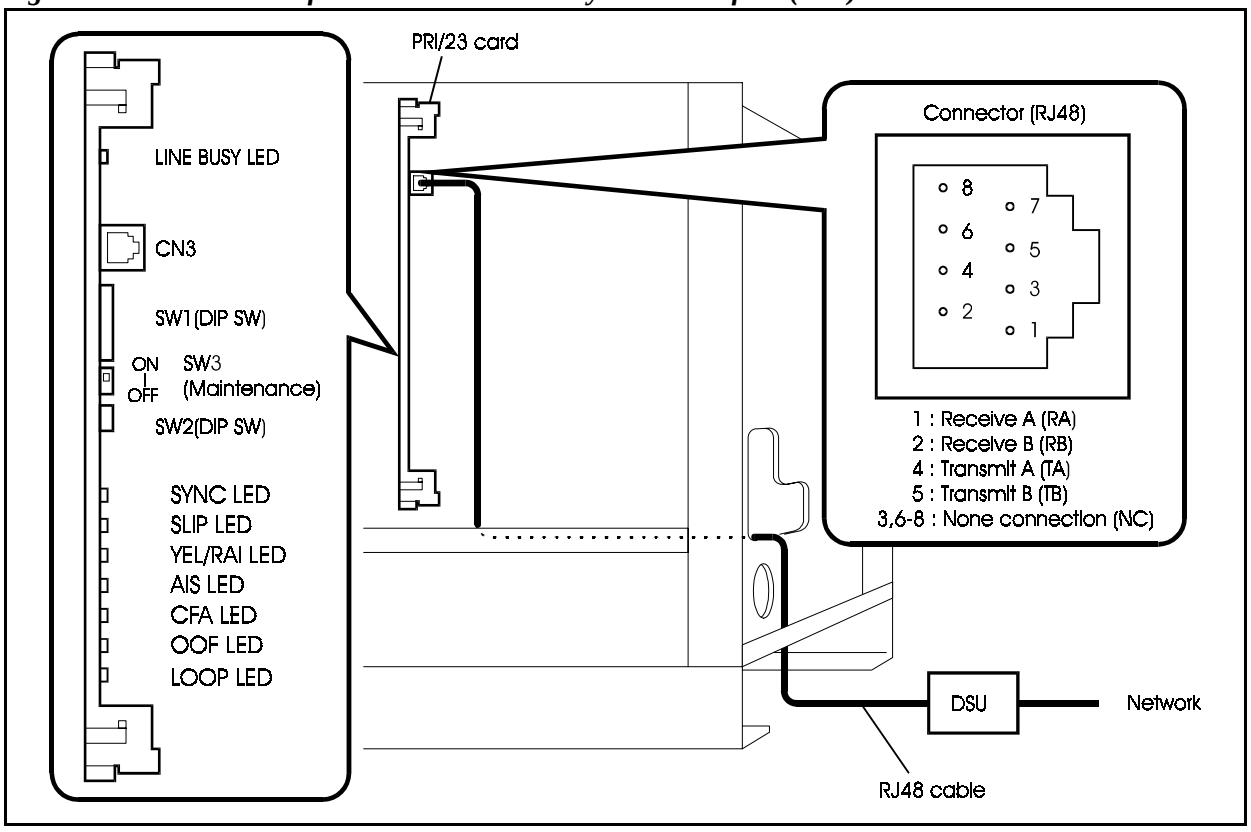

S-Point ISDN Interface (SBRI)

Guidelines

- S-point ISDN is accommodated by the SBRI/4 card. Four S-point ISDN lines can be connected to each SBRI/4 card.
- The system supplies -40V to the ISDN terminal which is connected to S-point interface card. Although output is limited so that the terminals which operate upon “Restricted Mode” (420mm) are available to operate by this power supply.
  This system cannot support the terminal which operate upon “Normal Mode” (1W).
- S-point ISDN is connected to the SBRI/4 card using 8-pin modular connectors. For details on the pin arrangement of the 8-pin modular connector, see Figure 2-4.
- The state of use of selected channels can be displayed on the LED by setting the rotary switch (SW1) on the SBRI/4 card. Table 2-2 shows the settings (See page 2-5).
- Table 2-6 shows the maximum number of cards that can be installed in each system size.

Table 2-6. Maximum Number of S-point ISDN Interfaces per System

System Type	Maximum Cards	Maximum Number of ISDN/(channels)
40 ports (CAB40 × 1)	5	20/(40 ch)
72 ports (CAB40 × 2)	9	36/(72 ch)
96 ports (CAB96 × 1)	12	48/(96 ch)
192 ports (CAB96 + CAB96B)	24	96/(192 ch)
288 ports (CAB96 + CAB96B × 2)	36	144/(288 ch)
384 ports (CAB96 × 2 + CAB96B × 2)	48	192/(384 ch)
480 ports (CAB96 × 2 + CAB96B × 3)	60	240/(480 ch)
576 ports (CAB96 × 2 + CAB96B × 4)	72	288/(576 ch)

Installation

1. Insert the SBRI/4 card in an available flexible slot.

2. Connect the 8-pin modular jack (RJ48) to the S-point ISDN wires from the ISDN terminal equipment.

3. Pass the S-point ISDN wires with 8-pin modular jack through the wiring aperture in CCU and connect it to the modular connector on the SBRI/4 card.

Figure 2-4. Connection of S-point ISDN Interface (SBRI)

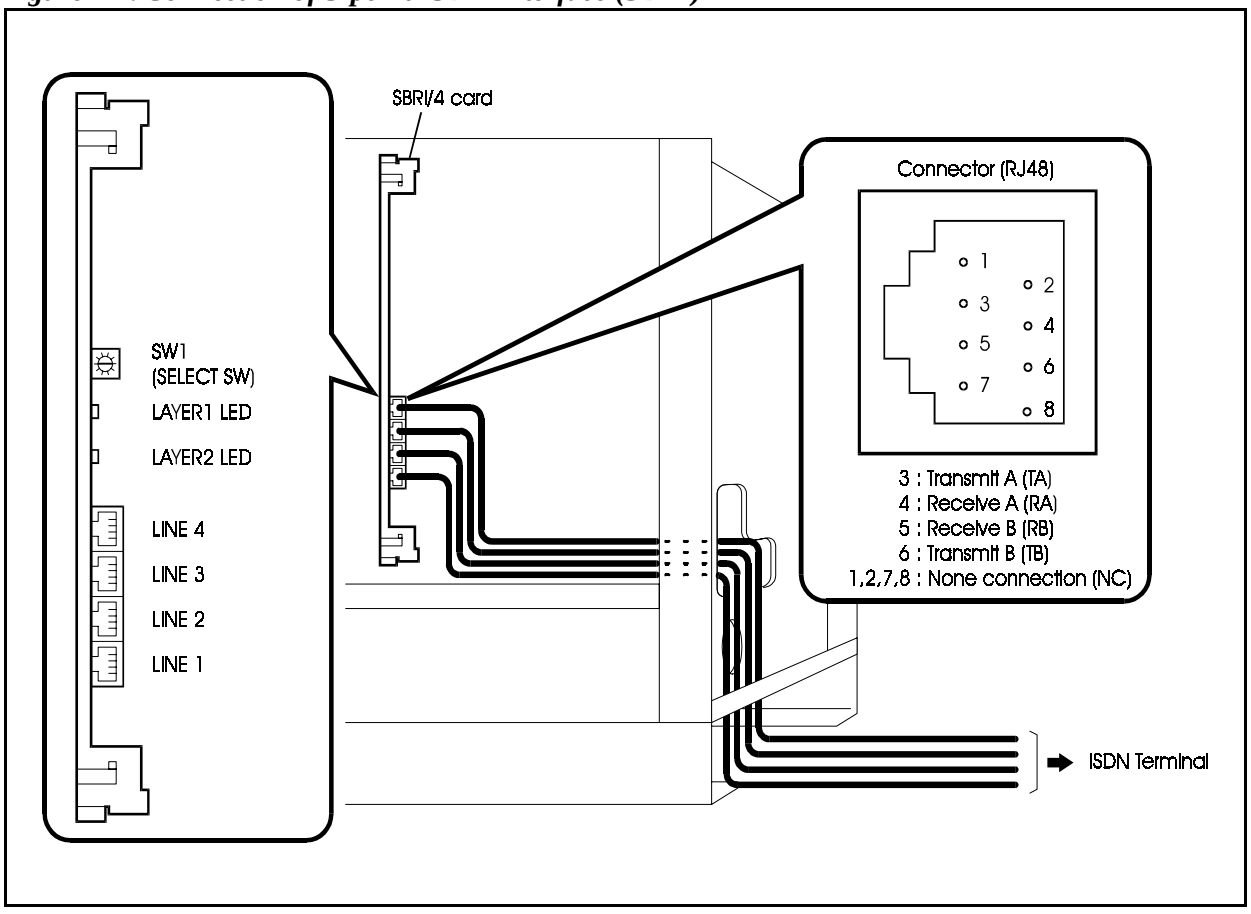

Point to Multi-point connection

Point to Multi-point connection is available in S-point BRI.

If you use point to multi-point connection, wiring length limitation is different depending on the program setting. (Passive Bus : FF3 1 BSSC 0202)

0: Short Loop:

Wire	**Wiring length**
High Impedance wire (Zo = 150Ω)	Maximum 200m
Low Impedance wire (Zo = 75Ω)	Maximum 100m

1: Long distance away:

Maximum 1km.
The distance between terminal equipments must be conneted within 25-50m in order to restrict delay of the signal.

Figure 2-5. Point to multi-point connection (Long distance away)

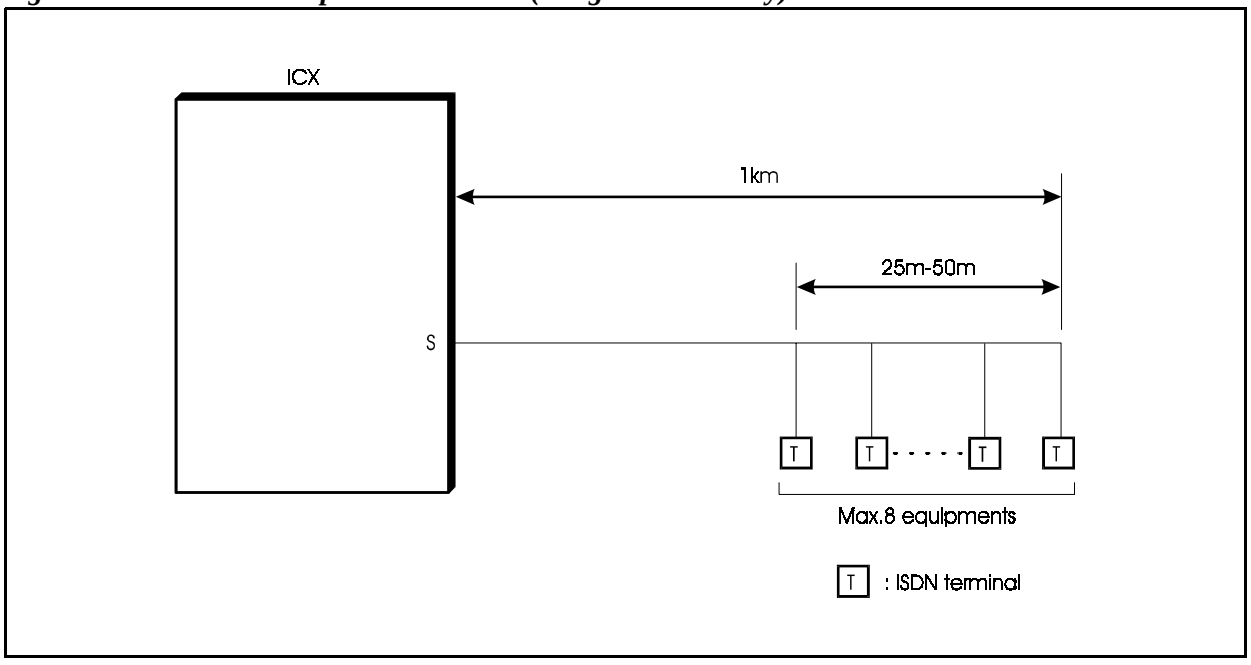

S-point ISDN Primary Rate Interface (PRI)

Guidelines

- The S-point ISDN primary rate interface is accommodated on the PRI/30 card. You can connect one S-point ISDN primary rate interface line to each PRI/30 card.
- The PRI/30 card switches can also be set for use as an T-point ISDN primary rate interface (see page 2-7).
- The S-point ISDN primary rate interface is connected to the PRI/30 card using an 8-pin modular jack. For details on the pin arrangement of the 8-pin modular connector (RJ48), see Figure 2-15.
- The PRI/23 card can be set using DIP switch SW2-2 for "8-channel mode" or "Other mode".
- Table 2-7 shows the mode settings of the PRI/30 card.

Table 2-7. Mode Settings of PRI/30 Card

Card Name	**Switch Setting Mode**	**Card Assignment/ No. of Channels Used**
PRI/30 card (Primary Rate Interface)	8 ch mode	PRIS/8: 1 to 8B+D
	Other mode	PRIS/30: 1 to 30B+D

- The ICX can accommodate a maximum of 8 communication channels per flexible slot. If you select "Other mode", there is a limit of the number of cards that can be installed in other slots (see page 1-16).
- Table 2-8 shows the maximum number of S-point ISDN primary rate interfaces that can be installed in each system size.

Table 2-8. Maximum Number of S-point ISDN Primary Rate Interface Cards per System

System Type	Maximum Cards (Available flexible slot positions)	Maximum No. of ISDN/(channels)
40 ports (CAB40 × 1)	2/(1, 5)	2/(60ch)
72 ports (CAB40 × 2)	3/(1, 5, 9)	3/(90ch)
96 ports (CAB96 × 1)	3/(1, 5, 9)	3/(90ch)
192 ports (CAB96 + CAB96B)	6/(1, 5, 9 × 2)	6/(180ch)
288 ports (CAB96 + CAB96B × 2)	9/(1, 5, 9 × 3)	9/(270ch)
384 ports (CAB96 × 2 + CAB96B × 2)	12/(1, 5, 9 × 4)	12/(360ch)
480 ports (CAB96 × 2 + CAB96B × 3)	15/(1, 5, 9 × 5)	15/(450ch)
576 ports (CAB96 × 2 + CAB96B × 4)	18/(1, 5, 9 × 6)	18/(540ch)

Installation

1. Set the DIP switch (SW2-1) of the PRI/30 card OFF (extension).
2. Set the DIP switch (SW2-2) of the PRI/30 card as shown in Table 2-9.

Table 2-9. Switch Setting for SW2-2 on PRI/23 Card

Switch No.	Function	
SW2-2	ON	Set to "Other mode". Can be used with the channel of 1 to 30B+D.
	OFF	Set to "8-channel mode". Can be used with 1 to 8B + D channels.

3. Insert the PRI/30 card into the specified flexible slot (see page 1-16).
4. Connect the 8-pin modular jack (RJ48) to the S-point ISDN primary rate interface wires from the ISDN terminal equipment.
5. Pass the S-point ISDN wires with 8-pin modular jack through the wiring aperture in the CCU and connect it to the modular connector on the PRI/30 card.

Figure 2-6. Connection of S-point ISDN Primary Rate Interface (PRI)

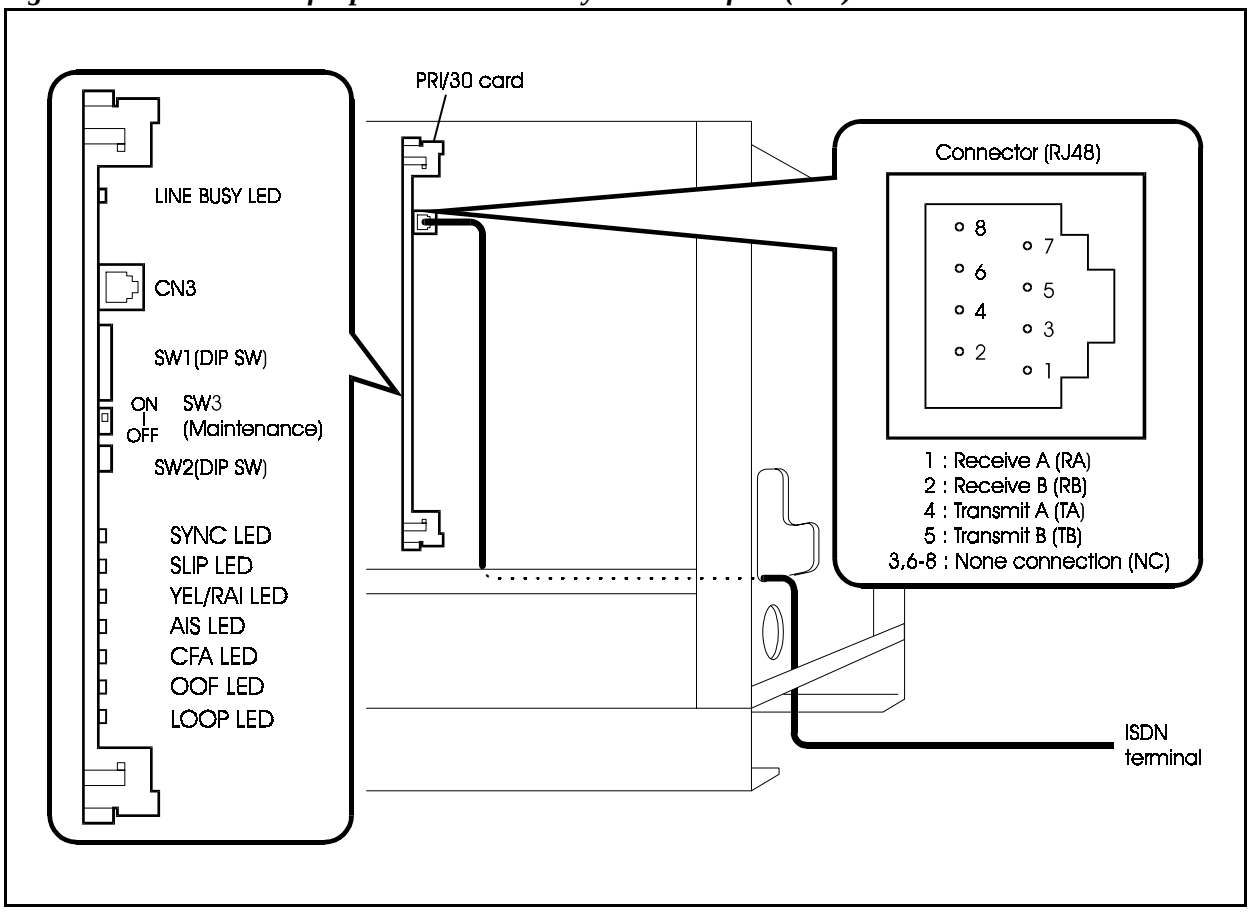

Chapter 3. Quick-Start Programming

The ISDN Interface includes many programming options, which allow you to customize how your ISDN is used.

In most cases, however, you only need to set a few of the programs to get your ISDN online. This chapter summarizes the programs that are essential to ISDN installation.

The following table shows the programming that are described in this chapter. For detaied descriptions of the rest ISDN programs, see Chapter 4, “Programming Reference.”

Programming	Page
Flexible slot Assignment	3-3
Exchange Line Number	3-3
B-Channel Tenant Groups	3-4
Extension Number	3-4

Programming Initial ISDN Options

The following instructions explain the minimum programming required to make the ISDN operational.

Minimum Programming

Free Slot Assignment

101 :
Card ID # for FS

(all CPCs) - Version 1.0 or higher

Enter the type of card installed in each Free Slot of the Cabinet.

01 (1-6) (01-12) Hold (1-99) Hold

Cabinet No. 1-6

Free Slot No. 1-12

Card Type No.

10: TBRI/4	35: SBRI/4
11: PRI/8 (T-point)	36: PRI/8 (S-point)
12: PRI/16 (T-point)	38: PRI/30 (S-point)
14: PRI/24 (T-point)	
15: PRI/30 (T-point)	

Notes:

Related Programming:

Card Reset FF8 0 04 0 BSS Hold (0 or 1) (FL/R + Hold)

Card Type Verification FF8 0 04 1 BSS 00 Hold [01-99 displays]

Card Version Verification FF8 0 04 1 BSS 00 Hold [Version No. displays]

Loopback 1 Diagnostics FF8 0 05 3 BSS(C) Hold (0 or 1) Hold

Loopback 2 Diagnostics FF8 0 05 4 BSS(C) Hold 1 Hold

Minimum T-point Programming

Exchange Line Number

BSSC-01 : Exchange Line Number

(all CPCs) - Version 1.0 or higher

Enter the exchange line number for the first ISDN channel only. The system will automatically assign sequential exchange line numbers to the rest of the channels on the card.

FF2 1 BSSC 01 Hold (0-576) Hold

BSSC: ISDN Exchange Line Position
B=Cabinet no. 1-6
SS=Slot no. 01-12
C=Circuit no. 1-4 (BRI)
or 1 (PRI)

Exchange Line No. (max. 3 digits)
2B+D: Max 575 (6 cabinets)
Max 95 (1 cabinet)
30B+D: Max 547 (6 cabinets)
Max 67 (1 cabinet)
default: [no assignment]

Notes:

2B+D (BRI) card: Supports up to 2 Exchange Lines (×4).
30B+D (PRI) card: Supports up to 24 Exchange Lines (minimum 8).
31B+D (PRI) card: Supports up to 31 Exchange Lines (minimum 8)

31th Exchange Line is reserved to use for ‘D’ channel as ‘B’ channel.

Related Programming:

Tenant Group (B-Channel)

BSSC-060 : TRK #001 Tenant G

(all CPCs) - Version 1.0 or higher

Assign the B-channels of an ISDN Exchange Line to Tenant Groups, which will apply when the Exchange Line originates an outbound call (such as DISA).

FF2 1 BSSC 06 (00-30) Hold (0-72) Hold

BSSC: ISDN Exchange Line Position
B=Cabinet no. 1-6
SS=Slot no. 01-12
C=Circuit no. 1-4 (BRI)
or 1 (PRI)

B-Channel 1-31:
00=B-Channel 1
01=B-Channel 2
02=B-Channel 3
...
30=B-Channel 31

Tenant Group No. (max. 12 per Cabinet)
in a 96-port system: 0-12
in a 288-port system: 0-36
in a 576-port system: 0-72

default: 0 [no assignment]

NOTE: B-Channel is available when common D-Channel is used.

Notes:

Related Programming:

Minimum S-point Programming

Extension Number

BSSC-01 :
EXT Number

(all CPCs) - Version 1.0 or higher

Assign an extension number to the ISDN port only.

FF3 1 BSSC 01 Hold (0-9999) Hold

BSSC: Extension Port position
B=Cabinet no. 1-6
SS=Slot no. 01-12
C=Circuit no. 1-4 (BRI)
or 1 (PRI)

Extension Number of ISDN Port

default: [no assignment]

Notes:

Related Programming:

Chapter 4. Programming Reference

This chapter describes programming parameters for the ISDN Interface.

The descriptions of each parameter include a list of available options and the associated programming address. Default options appear in bold.

This chapter is intended for readers who are familiar with ICX programming. For an introduction to ICX programming, see the *Programming Manual*, *Section 400*.

System Programming (FF1)

ISDN Outgoing Control

0019 :0
ISDN Setup CONT

(all CPCs) - Version 1.0 or higher

Enable/disable automatic dialing when a digit string dealed on an ISDN Exchange Line or extension matches an Automatic Route Selection (ARS) entry.

FF1 0 01 0019 Hold (0 or 1) Hold

0=Disable automatic outdialing on ARS match.(default)
Need number code for outgoing.
1=Enable automatic outdialing.

Notes:

Set this to “0” (Disable) if the system doesn’t use ARS routing. (Users must press the # key or time-out of the Interdigit Timer to dial out.)

Set tis to “1” (Enable) if you want the system to seize the Exchange Line/dial out automatially (so ISDN user doesn’t have to press # to send the call). If enabled, automatic outdialing is controlled by the addresses listed in **Related Programming** below.

Related Programming:

(*If automatic outdialing is enabled...*)

Leading Digit Follow Digit	FF6 0 00 (001-100) 0003 Hold (0-16) Hold
Analyze Digit Follow Digit	FF6 0 01 (001-500) 0003 Hold (0-16) Hold
Closed Number Follow Digits	FF6 2 07 (001-150) 0002 Hold (0-16) Hold

Synchronized Clock

0001 :
1st SYNC clock

(all CPCs) - Version 1.0 or higher

Prioritize clock sources that will synchronize with the Exchange Line.

FF1 0 18 (0001-0003) Hold (BSS/C) Hold

0001=1st Priority network
0002=2nd Priority network
0003=3rd Priority network

Cabinet/Slot/Exchange Line Port No.
B=Cabinet No. 1-6
SS=Slot No. 01-12
C=Exchange Line Port (1-4)

Enter “BSS” for PRI
Enter “BSSC” for BRI

default: [no assignment]

Notes:

If using a T-point ISDN interface, **Synchronized clock** setting is required to prevent data transmission errors, or noise, during voice conversations.

Related Programming:

Pre-Pause Timer for Outbound ISDN Exchange Line Calls (all CPCs) - Version 1.0 or higher

0009 :30
ISDN Pre-Pause

Set the length of time the system will wait for the first dialled digit after an ISDN Exchange Line is seized.

FF1 1 01 0009 Hold (1-255) Hold

1=1 second
2=2 seconds
.
.
255=255 seconds or 4 minutes/15 seconds

default: 30 seconds

Notes:

Related Programming:

Interdigit Timer for Outbound ISDN Exchange Line Calls

0010 :10
ISDN Interdigit

(all CPCs) - Version 1.0 or higher

Set the length of time the system will wait for the next dialed digit for outbound calls placed on an ISDN Exchange Line.

FF1 1 01 0010 Hold (1-255) Hold

1=1 second
2=2 seconds
.
255=255 seconds or 4 minutes/15 seconds

default: 10 seconds

Notes:

If ARS routing is disabled for auto-outdialing on ISDN Exchange Lines, the system will wait for this timer to expire before sending the call.

Related Programming:

ISDN Outgoing Control FF1 0 01 0019 Hold (0 or 1) Hold

DDI Dialling for ISDN “S” Point

0001 :
001 S-P DGT #

(all CPCs) - Version 1.0 or higher

Assign DID extension number(s) to each ISDN S-point.

FF1 4 05 (0001-0192) Hold (setting) Hold

Odd Address Nos. (0001, 0003, 0005,...0191)
S-point DID No.

Even Address Nos. (0002, 0004, 0006,...0192)
DID Incoming Destination Ext.No.

“S” point DIDI No.(0-9999) or
DID Extension No.(0-9999)

defaults: --[no assignment]

(see table below)

Notes:

When the extension calls the S-point DID number, the system will call the DID extension number and send the S-point DID number information (see figure below).

Table 4-1. DDI Dialling for ISDN “S” Point - addresses & defaults

Address No.	Description	Assignment Parameters	Default
0001	Pattern 1: S-point DDI No.	(0-9999)	- -
0002	Pattern 1: DDI Ext.No.	Ext.No.	- -
0003	Pattern 2: S-point DDI No.	(0-9999)	- -
0004	Pattern 2: DDI Ext.No.	Ext.No.	- -
...			
0191	Pattern 96: S-point DDI No.	(0-9999)	- -
0192	Pattern 96: DDI Ext.No.	Ext.No.	- -

ex1:

Necessary Programmings

FF1 405 0001→1231
FF1 405 0002→300
FF1 405 0003→1232
FF1 405 0004→300
FF1 405 0005→1233
FF1 405 0006→300

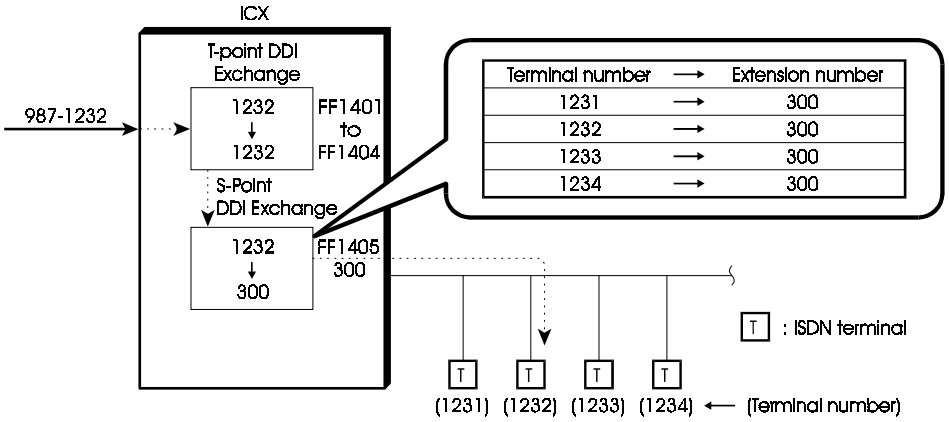

ex2:

Necessary Programmings

FF1 402 0001→1234
FF1 402 0002→1001
FF1 402 0006→1
FF1 405 0001→1001
FF1 405 0002→200

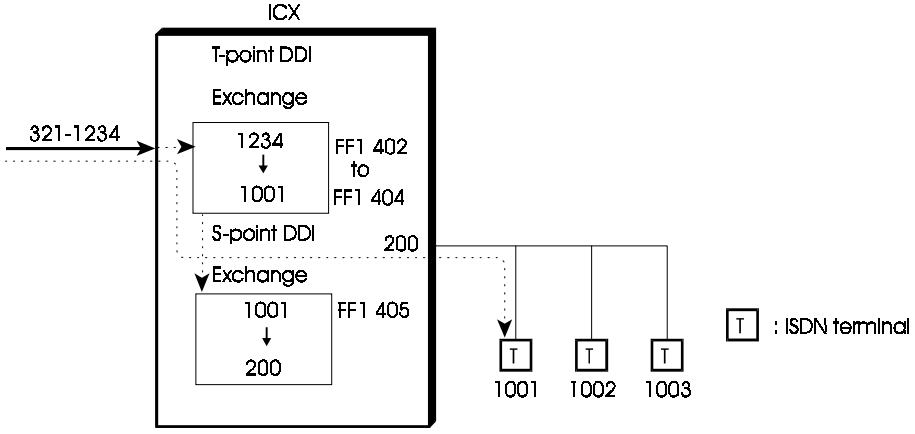

Exchange Line Programming (FF2)

D-Channel Position

BSSC-000 : Shared Dch POS

(all CPCs) - Version 1.0 or higher

If using a common D-Channel, identigy the PRI ISDN Exchange Line(s) it will control on the PRI card(30B). Applicable only if the system is using multiple PRI or BRI cards.

FF2 1 BSSC 00 0 Hold (BSSC) Hold

BSSC: ISDN Exchange Line Position
B=Cabinet no. 1-6
SS=Slot no. 01-12
C=PRI Circuit no. 1

Common D-Channel Position:
B=Cabinet no. 1-6
SS=Slot no. 01-12
C=Circuit no. 1-4 (BRI)
or 1 (PRI)

default: [no assignment]

Notes:

A Common (Shared) D channel is not used in U.K.

Skip this address if using only the 30B+D card for PRI, or only one 2B+D card for BRI.

Related Programming:

:

D-Channel Interface ID Code

BSSC-001 : Dch I/F ID Code

(all CPCs) - Version 1.0 or higher

If using a common D-channel, identify the Interface ID code (supplied by the Exchange Line) that will be used for common D-channel control.

FF2 1 BSSC 00 1 Hold (1-127) Hold

BSSC: ISDN Exchange Line Position
B=Cabinet no. 1-6
SS=Slot no. 01-12
C=PRI Circuit no. 1

Interface ID Code (max. 3 digits)

default: [no assignment]

Notes:

A Common (Shared) D channel is not used in U.K.

Exchange Line Connection Type (pt-to-pt/ Multiple) (all CPCs) - Version 1.0 or higher

-0200 : Connection Type

Set the ISDN exchange line for Point-to-Point connection (for either BRI or PRI), or Point-to-MultiPoint (BRI only).

FF2 1 BSSC 02 00 Hold (0 or 1) Hold

BSSC: ISDN Exchange Line Position
B=Cabinet no. 1-6
SS=Slot no. 01-12
C=Circuit no. 1-4 (BRI)
or 1 (PRI)

0=Point-to-Point (default)
1=Point-to-Multi-Point (BRI only)

Notes:

When using "D-Channel Position" (FF2 1 BSSC 000 Hold BSSC Hold), "Point-to-Point" Connection Type must be selected. See ***Figure 4-1*** for an illustration of a BRI Point-to-Multi-Point connection.

Related Programming:

Figure 4-1. BRI Point-to-Multi-Point connection

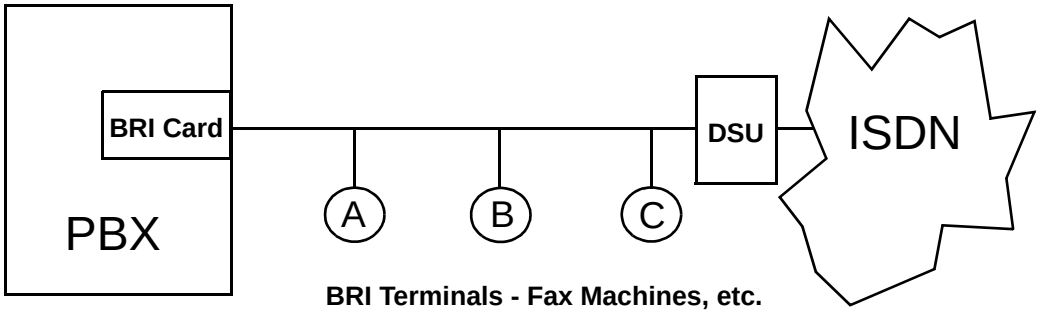

Ring Frequency

BSSC-0201 :1
Ring Frequency

(all CPCs) - Version 1.0 or higher

Set the ring frequency for the ISDN Exchange Line. Affects ringing pitch on digital phones only.

FF2 1 BSSC 02 01 Hold (0-6) Hold

BSSC: ISDN Exchange Line Position
B=Cabinet no. 1-6
SS=Slot no. 01-12
C=Circuit no. 1-4 (BRI)
or 1 (PRI)

0=No Ring
1=400/562 Hz (default)
2=1000/1340 Hz
3=400 Hz
4=800/1040 Hz
5=1040/1320 Hz
6=660/1320 Hz

Notes:

Related Programming:

Ring Pattern

BSSC-0202 :1
Ring Cycle PTN

(all CPCs) - Version 1.0 or higher

Set the ring pattern for incoming calls on the ISDN Exchange Line.
Affects digital phones only.

FF2 1 BSSC 02 02 Hold (0-12) Hold

BSSC: ISDN Exchange Line Position
B=Cabinet no. 1-6
SS=Slot no. 01-12
C=Circuit no. 1-4 (BRI)
or 1 (PRI)

for U.K.
0=No Ring
1=1on/2off (in seconds) (default)
2=2on/1off
3=1on/1off
4=0.5on/0.5off
5=.25on/2.75off
6=.25on/.25off/.25on/2.25off
7=.25on/.25off/.25on/.25off/.25on/1.75off
8=.75on/.25off/.75on/1.25off
9=1on/.25off/.25on/1.5off/
10=1on/.25off/.25on/.25off/.25on/1off
11=1.375on/.125off/.125on/.125off/.125on/.125off
12=Continuous Tone

DTMF On/Off Pattern During Talk

BSSC-0203 :1
DTMF PTN-Talk

(all CPCs) - Version 1.0 or higher

Set the DTMF signaling pattern that will apply after the extension user connects to the called party during an Exchange Line call on the ISDN Exchange Line.

FF2 1 BSSC 02 03 Hold (0-2) Hold

BSSC: ISDN Exchange Line Position
B=Cabinet no. 1-6
SS=Slot no. 01-12
C=Circuit no. 1-4 (BRI)
or 1 (PRI)

0=DTMF Pattern #1
1=DTMF Pattern #2 (default)
2=DTMF Pattern #3

Notes:

This address applies to the entry of account codes, selection of voice menu options, etc, during a call.

Related Programming:

DTMF ON: Pattern #1 FF1 101 0016 Hold (1-255) Hold
DTMF OFF: Pattern #1 FF1 101 0017 Hold (1-255) Hold
DTMF ON/OFF: Pattern #2 FF1 101 0018 Hold (1-255) Hold
DTMF ON/OFF: Pattern #3 FF1 101 0019 Hold (1-255) Hold

Exchange Line Connection Type (Exchange Line/PBX)

0300
TRK Type CO/PBX

(all CPCs) - Version 1.0 or higher

Set whether the ISDN Exchange Line connects directly to the Exchange Line or is behind a PBX/Centrex.

FF2 1 BSSC 03 00 Hold (0 or 1) Hold

BSSC: ISDN Exchange Line Position
B=Cabinet no. 1-6
SS=Slot no. 01-12
C=Circuit no. 1-4 (BRI)
or 1 (PRI)

0=Exchange Line (default)
1=PBX Exchange Line

Notes:

Related Programming:

Auto-Repeat Dial

BSSC-0301 :1
Auto Repeat Dial

(all CPCs) - Version 1.0 or higher

Enable/Disable Auto-Repeat Dialing on the ISDN Exchange Line.

FF2 1 BSSC 03 01 Hold (0 or 1) Hold

BSSC: ISDN Exchange Line Position
B=Cabinet no. 1-6
SS=Slot no. 01-12
C=Circuit no. 1-4 (BRI)
or 1 (PRI)

0=Do not allow Auto-Repeat Dialing.
1=Allow Auto-Repeat Dialing. (default)

Notes:

Auto Repeat Dialing: Place a call to a busy party. Stay in monitor mode and press REDIAL. System automatically redials the number, and repeats redialing until ringback is heard or 14 auto-repeat attempts have been made.

Related Programming:

Flash Timer for Auto-Repeat Dial FF1 1 01 0003 Hold (1-255) Hold

Call Logging for Outbound Calls

BSSC-0302 :1
SMDR Output/Out

(all CPCs) - Version 1.0 or higher

Set whether ***outbound*** calls on the ISDN Exchange Line will be included in Call logging records.

FF2 1 BSSC 03 02 Hold (0 or 1) Hold

BSSC: ISDN Exchange Line Position
B=Cabinet no. 1-6
SS=Slot no. 01-12
C=Circuit no. 1-4 (BRI)
or 1 (PRI)

0=Do not include in Call Logging.
1=Include in Call Logging. (default)

Notes:

Related Programming:

Call Logging for Inbound Calls

BSSC-0303 :0
SMDR Output/In

(all CPCs) - Version 1.0 or higher

Set whether ***incoming*** calls on the ISDN Exchange Line will be included in Call logging records.

FF2 1 BSSC 03 03 Hold (0 or 1) Hold

BSSC: ISDN Exchange Line Position
B=Cabinet no. 1-6
SS=Slot no. 01-12
C=Circuit no. 1-4 (BRI)
or 1 (PRI)

0=Do not include in Call Logging. (default)
1=Include in Call Logging.

Notes:

Related Programming:

Flash Key Operation

BSSC-0304 : 0
Flash Control

(all CPCs) - Version 1.0 or higher

Set what happens when a digital phone user presses the FL/R key during a call on this Exchange Line.

FF2 1 BSSC 03 04 Hold (0 or 1) Hold

BSSC: ISDN Exchange Line Position
B=Cabinet no. 1-6
SS=Slot no. 01-12
C=Circuit no. 1-4 (BRI)
or 1 (PRI)

0=Current talk path is disconnected but keeps the Exchange Line, then user hears simulated dial tone. (default)
1=Exchange Line is released, then user hears internal dial tone.

Notes:

Related Programming:

Long Talk Alarm

BSSC-0305 :0
Long-Talk Alarm

(all CPCs) - Version 1.0 or higher

Enable/Disable alarm tone heard by extension user during an outbound call on this Exchange Line, if the call lasts longer than the **Long Talk Alarm Timer.**

FF2 1 BSSC 03 05 Hold (0 or 1) Hold

BSSC: ISDN Exchange Line Position
B=Cabinet no. 1-6
SS=Slot no. 01-12
C=Circuit no. 1-4 (BRI)
or 1 (PRI)

0=Disable Long Talk Alarm. (default)
1=Enable Long Talk Alarm.

Notes:

Related Programming:

Long Talk Alarm #1 Timer FF1 102 0010 Hold (0-255) Hold
Long Talk Alarm #2 Timer FF1 102 0011 Hold (0-255) Hold
Extension COS: Long Talk Alarm FF1 003 (00-15) 40 Hold (0 or 1) Hold

Alarm Ringing

BSSC-0306 :0
Alarm Ringing

(all CPCs) - Version 1.0 or higher

Enable/Disable Alarm Ringing for incoming calls on this Exchange Line that ring unanswered for longer than the **Slide Ring/Alarm Ring Timer.**

FF2 1 BSSC 03 06 Hold (0 or 1) Hold

BSSC: ISDN Exchange Line Position
B=Cabinet no. 1-6
SS=Slot no. 01-12
C=Circuit no. 1-4 (BRI)
or 1 (PRI)

0=Disable Alarm Ringing (default)
1=Enable Alarm Ringing

Notes:

Alarm Ringing: Ringing frequency/interval changes for an incoming call that rings unanswered for longer than the **Slide Ring/Alarm Ring Timer.**

Slide Ringing (if enabled -- see next address9 will override Alarm Ringing.

Related Programming:

Ring Alam Frequency for Unanswered calls FF1 0 21 0001 Hold (0-6) Hold

Ring Alarm Pattern for Unanswered calls	FF1 021 0002 Hold (0-12) Hold
Slide Ring/Alarm Ring Timer (Day 1)	FF1 102 0007 Hold (0-255) Hold
Slide Ring/Alarm Ring Timer(Day2)	FF1 102 0008 Hold (0-255) Hold
Slide Ring/Alarm Ring Timer (Night)	FF1 102 0009 Hold (0-255) Hold

Slide Ringing

BSSC-0307 :0
Slide Ringing

(all CPCs) - Version 1.0 or higher

Enable/Disable slide ringing for incoming call on this Exchange Line that ring unanswered for longer than the **Slide Ring/Alarm Ring Timer.**

FF2 1 BSSC 03 07 Hold (0 or 1) Hold

BSSC: ISDN Exchange Line Position
B=Cabinet no. 1-6
SS=Slot no. 01-12
C=Circuit no. 1-4 (BRI)
or 1 (PRI)

0=Disable Slide Ringing. (default)
1=Enable Slide Ringing.

Notes:

Slide Ringing: A type of delayed ringing for extensions with Line FF-key assignments. An incoming call on an Exchange Line enabled for Slide Ringing (see above address) will ring at the assigned extension or Hunt Group first (see **Day1/2Night Ring Assignments** in FF2). Then, after the **Slide Ring/Alarm Ring Timer** expires, the call will begin ringing at the extension(s) that have an FF-key for the Exchange Line (see **FF-Key Feature Assignment** in FF4)

Related Programming:

Slide Ring/Alarm Ring Timer (Day1)	FF1 1 02 0007 Hold (0-255) Hold
Slide Ring/Alarm Ring Timer (Day2)	FF1 1 02 0008 Hold (0-255) Hold
Slide Ring/Alarm Ring Timer (Night)	FF1 1 02 0009 Hold (0-255) Hold
Slide Ringing (on individual extensions)	FF3 0 BSSC 04 02 Hold (0 or 1) Hold
Ring Type/Destination - Day1, Day2, Night	(see FF2 0 BSSC 04 [0-5])
FF-Key (Line) Feature Assignment	(see FF4)

Indirect LCR

BSSC-0308 : 0
Indirect LCR

(all CPCs) - Version 1.0 or higher

Enable/Disable the Indirect Least Cost Routing (LCR) function on the ISDN Exchange Line.

FF2 1 BSSC 03 08 Hold (0 or 1) Hold

BSSC: ISDN Exchange Line Position
B=Cabinet no. 1-6
SS=Slot no. 01-12
C=Circuit no. 1-4 (BRI)
or 1 (PRI)

0=Disable Indirect LCR. (default)
1=Enable Indirect LCR.

Notes:

Inderect LCR: System will send a pre-assigned code (set in the ARS Dial Conversion Tables) when an extension seizes the exchange line to make an outgoing call.

This address is used in the U.K. for sending a system identification PIN number to the Central Office. Do not enable this address for MCO access code routing (eg., dialing “9” to get an outside line); instead, use ARS tables (see FF6) so the system can distinguish intercom calls from outgoing calls.

Related Programming:

FF6 2 05: Dial Conversion Tables

B-Channel Select

BSSC-0309 :0
Bch Select

(all CPCs) - Version 1.0 or higher

Set the method used by the system to seize a B-channel for an outgoing call.

FF2 1 BSSC 03 09 Hold (0 or 1) Hold

BSSC: ISDN Exchange Line Position
B=Cabinet no. 1-6
SS=Slot no. 01-12
C=Circuit no. 1-4 (BRI)
or 1 (PRI)

0=System will select the highest-numbered channel. (default)

1=System will select the lowest-numbered channel.

Notes:

Set this address to the ***opposite*** of the exchange line’s method, to prevent “glare” (when the same channel is simultaneously seized by the Exchange Line for an incoming call, and by the system for an outgoing call).

*Select **0 (system selects highest-numbered channel)** if the exchange line **cannot** change channels when “glare” occurs.

*Select **1 (system selects lowest-numbered channel)** if the exchange line **can** change channels when”glare” occurs.

Related Programming:

B-Channel Numbering (Layer 3)

BSSC-0310 :1
Bch MAP

(all CPCs) - Version 1.0 or higher

Select the Layer 3 format of the messaging commands sent by the Exchange Line.

FF2 1 BSSC 03 10 Hold (0 or 1) Hold

BSSC: ISDN Exchange Line Position
B=Cabinet no. 1-6
SS=Slot no. 01-12
C=Circuit no. 1-4 (BRI)
or 1 (PRI)

0=Slot mapping.
1=Channel number. (default)

Notes:

In ISDN, Layers 1, 2 and 3 represent signaling levels over the D-channel. **Layer 1** is the basic hardware level that controls messages regarding electrical characteristics, such as speed, channel structure, etc. **Layer 2** is the “housekeeping” level, containing controls that make sure the messages coincide, providing sequence and flow control, etc. **Layer 3** is the feature level with messages that establish-------, maintain, and terminate connections, as well as additional information for different applications, such as passing the identity of the calling party, passing terminal compatibility information, allowing the redirectin of calls, etc.

Related Programming:

B-Channel Numbering (Layer 3) (ISDN extensions) FF3 1 BSSC 03 01 Hold (0 or 1) Hold

Call ID Length

BSSC-0311:0
Call ID Length

(all CPCs) - Version 1.0 or higher

Set the ID method by which the Exchange Line flags messages sent to the system to keep track of the same inbound or outbound call.

FF2 1 BSSC 03 11 Hold (0 or 1) Hold

BSSC: ISDN Exchange Line Position
B=Cabinet no. 1-6
SS=Slot no. 01-12
C=Circuit no. 1-4 (BRI)
or 1 (PRI)

0=1 octet (byte) (default for BRI)
1=2 octets (bytes) (default for PRI)

Notes:

"1byte/octet" rotates from 1 to 127 IDs. "2 bytes/octets" from 1 to 32,767 IDs.

Related Programming:

Calling Number Send

BSSC-0312 : 1
Calling # Send

(all CPCs) - Version 1.0 or higher

Set whether the system will send the "calling number" (originating phone number) to the Exchange Line when an outgoing call is placed on this Exchange Line.

FF2 1 BSSC 03 12 Hold (0 or 1) Hold

BSSC: ISDN Exchange Line Position
B=Cabinet no. 1-6
SS=Slot no. 01-12
C=Circuit no. 1-4 (BRI)
or 1 (PRI)

0=Do not send calling number to an Exchange Line
1=Send caling number to an Exchange Line. (default)

Notes:

Related Programming:

Calling Number Area Code FF2 1 BSSC 09 0 Hold (up to 6 digits) Hold
Calling Number Office Code FF2 1 BSSC 09 1 Hold (up to 6 digits) Hold
Calling Number Subscriber Number FF2 1 BSSC 09 2 Hold (up to 4 digits) Hold

Sub-Address Type

BSSC-0313 : 0
Sub Address Type

(all CPCs) - Version 1.0 or higher

Set the coding type used for sub-addressing on the ISDN terminal.

FF2 1 BSSC 03 13 Hold (0 or 1) Hold

BSSC: ISDN Exchange Line Position
B=Cabinet no. 1-6
SS=Slot no. 01-12
C=Circuit no. 1-4 (BRI)
or 1 (PRI)

0=IA5 coding (default)
1=BCD coding

Notes:

IA5 stands for "International Alphabet No. 5" coding. **BCD** stands for "Binary Coded Decimal" coding, used for the type of numbers.

Related Programming:

Calling Number Area Code FF2 1 BSSC 09 0 Hold (up to 6 digits) Hold
Calling Number Office Code FF2 1 BSSC 09 1 Hold (up to 6 digits) Hold
Calling Number Subscriber Number FF2 1 BSSC 09 2 Hold (up to 4 digits) Hold

Day1 Ring Type

BSSC-040 :0
Day1 Ring Type

(all CPCs) - Version 1.0 or higher

Set the ISDN Exchange Line's ringing type during Day1 mode.

FF2 1 BSSC 04 0 Hold (0-6) Hold

BSSC: ISDN Exchange Line Position
B=Cabinet no. 1-6
SS=Slot no. 01-12
C=Circuit no. 1-4 (BRI)
or 1 (PRI)

0=Multiple Incoming (default)
1=DID or CLI
2=DISA
3=DIL to Extension
4=DIL to Hunt Group
5=DIL to SSD
6=DIL to Attendant

Day1 Ring Destination

BSSC-041: :
D1 Destination

(all CPCs) - Version 1.0 or higher

Assign a destination extension, Hunt Group, or SSD code setting in the above address.

FF2 1 BSSC 04 1 Hold (Ext, HG, or SSD) Hold

BSSC: ISDN Exchange Line Position
B=Cabinet no. 1-6
SS=Slot no. 01-12
C=Circuit no. 1-4 (BRI)
or 1 (PRI)

Destination Number:

if “DIL to Extension”:	Extension No., Virtual Port No., or Closed No.
if “DIL to Hunt Group”:	Hunt Group No.
if “DIL to SSD”:	SSD Code No.

default: [no assignment]

Notes:

When the system receives the digits from the Central office on the ISDN Exchange Line, it wil handle the call as a DID call.

If ‘DIL to Attendant’ is selected in the previous address, this address is not required to program. Just specify the ring type as ‘DIL to Attendant’.

Multiple Incoming: An incoming call on this Exchange Line can ring on multiple extensions that have an Exchange Line or MCO FF-key line appearnace for the Exchange Line (see **Line FF-Key** addresses in FF4).

Ring destinations for **DID/CLI** Exchange Lines are assigned in **DID Tables** (FF1 4 02 and 04). **DISA** Exchange Lines do not require a ring destination assignment: the DISA caller dials the desired extension after entering the phone system.

Related Programming:

FF-key Feature Assignment (Digital Key Phones/SLTs/EM24s) FF4 0 BSSC 0 (01-32) Hold FL/R (Code)
FF-key Feature Assignment (DSS/72) FF4 1 BSSC 0 (01-72) Hold FL/R (Code)Hold
DID Dial Table (“A”Side) FF1 4 02 (000-575) (1-6) Hold (0-9999 or 1-72) Hold
DID Dial Table (“B”Side) FF1 4 02 (000-575) (1-6) Hold (0-9999 or 1-72) Hold
Extension Number (digital keyphones/SLTs) FF3 0 BSSC 02 Hold (0-9999) Hold
Extension Number (S-point ISSDN ext.) FF3 1 BSSC 01 Hold (0-9999) Hold
Virtual Extension Number FF3 2 (001-576) 00 Hold (0-9999) Hold
RAI Extension Number FF3 3 00 Hold (0-9999) Hold
Closed Number Digits FF6 2 07 (001-150) 0001 Gikd (1-4 duguts) Hold
Extension HG Pilot Number FF5 1 (01-72) 02 Hold (0-9999) Hold
SSD Numbers FF8 1 02 Hold 0 Hold Hold (SSD) Hold FL/R (Phone No.) Hold
Attendant HG Pilot Number FF5 0 01 Hold (0-9999) Hold

Day2 Ring Type

BSSC-042 :0
Day2 Ring Type

(all CPCs) - Version 1.0 or higher

Set the ISDN Exchange Line's ringing type during Day2 mode.

FF2 1 BSSC 04 2 Hold (0-6) Hold

BSSC: ISDN Exchange Line Position
B=Cabinet no. 1-6
SS=Slot no. 01-12
C=Circuit no. 1-4 (BRI)
or 1 (PRI)

0=Multiple Incoming (default)
1=DID or CLI
2=DISA
3=DIL to Extension
4=DIL to Hunt Group
5=DIL to SSD
6=DIL to Attendant

Day2 Ring Destination

BSSC-043 :
D2 Destination

(all CPCs) - Version 1.0 or higher

Assign a destination extension, Hunt Group, or SSD code setting in the above address.

FF2 1 BSSC 04 3 Hold (Ext, HG, or SSD) Hold

BSSC: ISDN Exchange Line Position
B=Cabinet no. 1-6
SS=Slot no. 01-12
C=Circuit no. 1-4 (BRI)
or 1 (PRI)

Destination Number:

if "DIL to Extension":	Extension No., Virtual Port No., or Closed No.
if "DIL to Hunt Group":	Hunt Group No.
if "DIL to SSD":	SSD Code No.

default: [no assignment]

Notes:

(see "Day 1 Ring Type/Destination")

Related Programming:

(see "Day 1 Ring Type/Destination")

Night Ring Type

BSSC-044 :0
Night Ring Type

(all CPCs) - Version 1.0 or higher

Set the ISDN Exchange Line's ringing tpe during Night Mode.

FF2 1 BSSC 04 4 Hold (0-6) Hold

BSSC: ISDN Exchange Line Position
B=Cabinet no. 1-6
SS=Slot no. 01-12
C=Circuit no. 1-4 (BRI)
or 1 (PRI)

0=Multiple Incoming (default)
1=DID or CLI
2=DISA
3=DIL to Extension
4=DIL to Hunt Group
5=DIL to SSD
6=DIL to Attendant

Night Ring Destination

BSSC-045 :
N Destination

(all CPCs) - Version 1.0 or higher

Assign a destination extension, Hunt Group, or SSD code setting in the above address.

FF2 1 BSSC 04 5 Hold (Ext, HG, or SSD) Hold

BSSC: ISDN Exchange Line Position
B=Cabinet no. 1-6
SS=Slot no. 01-12
C=Circuit no. 1-4 (BRI)
or 1 (PRI)

Destination Number:

if "DIL to Extension":	Extension No., Virtual Port No., or Closed No.
if "DIL to Hunt Group":	Hunt Group No.
if "DIL to SSD":	SSD Code No.

default: [no assignment]

Notes:

(see "Day 1 Ring Type/Destination")

Related Programming:

(see "Day 1 Ring Type/Destination")

Day1 Delayed Ring Type

BSSC-050 :0
Day1 D-Ring Type

(all CPCs) - Version 1.0 or higher

Set the ISDN Exchange Line's delayed-ringing type during Day1 mode.
NOTE: **Day1 Ring Type** must be either "DIL" or "Multiple Incoming" to set Day1 Delayed Ringing (DID and DISA do not apply here).

FF2 1 BSSC 05 0 Hold (0-4) Hold

BSSC: ISDN Exchange Line Position
B=Cabinet no. 1-6
SS=Slot no. 01-12
C=Circuit no. 1-4 (BRI)
or 1 (PRI)

0=Disabled; no delayed ringing (default)
1=delay-ring to Extension
2=delay-ring to Hunt Group
3=delay-ring to SSD
4=delay-ring to Attendant

Day1 Delayed Ring Destination

BSSC-051 :
D1 D-Destination

(all CPCs) - Version 1.0 or higher

Assign a destination extension, Hunt Group, or SSD code, depending on the setting in the above address.

FF2 1 BSSC 05 1 Hold (Ext, HG, or SSD) Hold

BSSC: ISDN Exchange Line Position
B=Cabinet no. 1-6
SS=Slot no. 01-12
C=Circuit no. 1-4 (BRI)
or 1 (PRI)

Destination Number:

if "delay-ring to Extension":	Extension No., Virtual Port No., or Closed No.
if "delay-ring to Hunt Group":	Hunt Group No.
if "delay-ring to SSD":	SSD Code No.

default: [no assignment]

Notes:

Delayed ringing for DID exchange line is set in the **DID Tables** (FF1 4)

If 'delay-fing to Attendant' is selected in the previous address, this program is not required. Just specify the ring type as 'delay-fing to Attendant'.

Related Programming:

Day 1 Ring Type FF2 1 BSSC 04 0 Hold (0-6) Hold
Extension Number (digital keyphones/SLTs) FF3 0 BSSC 02 Hold (0-9999) Hold
Extension Number (S-point ISSDN ext.) FF3 1 BSSC 01 Hold (0-9999) Hold
Virtual Extension Number FF3 2 (001-576) 00 Hold (0-9999) Hold
RAI Extension Number FF3 3 00 Hold (0-9999) Hold
Closed Number Digits FF6 2 07 (001-150) 0001 Gikd (1-4 duguts) Hold
Extension HG Pilot Number FF5 1 (01-72) 02 Hold (0-9999) Hold

SSD Numbers FF8 1 02 Hold 0 Hold Hold (SSD) Hold FL/R (Phone No.) Hold
Attendant HG Pilot Number FF5 0 01 Hold (0-9999) Hold

Day2 Delayed Ring Type

BSSC-052 :0
Day2 D-Ring Type

(all CPCs) - Version 1.0 or higher

Set the ISDN Exchange Line's delayed-ringing type during Day2 mode.
NOTE: **Day2 Ring Type** must be either "DIL" or "Multiple Incoming" to set Day2 Delayed Ringing (DDI and DISA do not apply here).

FF2 1 BSSC 05 2 Hold (0-4) Hold

BSSC: ISDN Exchange Line Position
B=Cabinet no. 1-6
SS=Slot no. 01-12
C=Circuit no. 1-4 (BRI)
or 1 (PRI)

0=Disabled; no delayed ringing (default)
1=delay-ring to Extension
2=delay-ring to Hunt Group
3=delay-ring to SSD
4=delay-ring to Attendant

Day2 Delayed Ring Destination

BSSC-053 :
D2 D-Destination

(all CPCs) - Version 1.0 or higher

Assign a destination extension, Hunt Group, or SSD code, depending on the setting in the above address.

FF2 1 BSSC 05 3 Hold (Ext, HG, or SSD) Hold

BSSC: ISDN Exchange Line Position
B=Cabinet no. 1-6
SS=Slot no. 01-12
C=Circuit no. 1-4 (BRI)
or 1 (PRI)

Destination Number:
if "delay-ring to Extension": Extension No., Virtual Port No., or Closed No.
if "delay-ring to Hunt Group": Hunt Group No.
if "delay-ring to SSD": SSD Code No.

default: [no assignment]

Notes:

(See 'Day 1 Delayed Ring Type/Destination".)

Related Programming:

Day2 Ring Type FF2 1 BSSC 04 2 Hold (0-6) Hold
Extension Number (digital keyphones/SLTs) FF3 0 BSSC 02 Hold (0-9999) Hold
Extension Number (S-pont ISDN ext.) FF3 1 BSSC 01 Hold (0-9999) Hold
Virtual Extension Number FF3 2 (001-576) 00 Hold (0-9999) Hold

RAI Extension Number FF3 3 00 Hold (0-9999) Hold
Closed Number Digits FF6 2 07 (001-150) 0001 Hold (1-4digits) Hold
Extension HG Pilot Number FF5 1 (01-72) 02 Hold (0-9999) Hold
SSD Numbers FF8 1 02 Hold 0 Hold Hold (SSD) Hold FL/R)(Phone No.) Hold
Attendant HG Pilot Number FF5 0 01 Hold (0-9999) Hold

Night Delayed Ring Type

BSSC-054 :0
NGT D-Ring Type

(all CPCs) - Version 1.0 or higher

Set the ISDN exchange line's delayed-ringing type during Night mode.
NOTE: **Night Ring Type** must be either 'DIL" or 'Multiple Incoming" to set Night Delayed Ringing (DID and DISA do not apply here).

FF2 1 BSSC 05 4 Hold (0-4) Hold

BSSC: ISDN Exchange Line Position
B=Cabinet no. 1-6
SS=Slot no. 01-12
C=Circuit no. 1-4 (BRI)
or 1 (PRI)

0=Disabled; no delayed ringing (default)
1=delay-ring to Extension
2=delay-ring to Hunt Group
3=delay-ring to SSD
4=delay-ring to Attendant

Night Delayed Ring Destination

BSSC-055 :
N D-Destination

(all CPCs) - Version 1.0 or higher

Assign a destination extension, Hunt Group, or SSD code, depending on the setting in the above address.
.

FF2 1 BSSC 05 5 Hold (Ext, HG, or SSD) Hold

BSSC: ISDN Exchange Line Position
B=Cabinet no. 1-6
SS=Slot no. 01-12
C=Circuit no. 1-4 (BRI)
or 1 (PRI)

Destination Number:

if "delay-ring to Extension":	Extension No., Virtual Port No., or Closed No.
if "delay-ring to Hunt Group":	Hunt Group No.
if "delay-ring to SSD":	SSD Code No.

default: [no assignment]

Notes:

(See 'Day 1 Delayed Ring Type/Destination".)

Related Programming:

Night Ring Type FF2 1 BSSC 04 4 Hold (0-6) Hold

Extension Number (digital keyphones/SLTs) FF3 0 BSSC 02 Hold (0-9999) Hold
Extension Number (S-pont ISDN ext.) FF3 1 BSSC 01 Hold (0-9999) Hold
Virtual Extension Number FF3 2 (001-576) 00 Hold (0-9999) Hold
RAI Extension Number FF3 3 00 Hold (0-9999) Hold
Closed Number Digits FF6 2 07 (001-150) 0001 Hold (1-4digits) Hold
Extension HG Pilot Number FF5 1 (01-72) 02 Hold (0-9999) Hold
SSD Numbers FF8 1 02 Hold 0 Hold Hold (SSD) Hold FL/R)(Phone No.) Hold
Attendant HG Pilot Number FF5 0 01 Hold (0-9999) Hold

TRS Class (Day)

BSSC-070 :1
Day1/2 TRS CLS

(all CPCs) - Version 1.0 or higher

Assign a Toll Restriction Service (TRS) class to the ISDN Exchange Line, applicable during Day1 and Day2 modes when the Exchange Line originates an outbound call (such as DISA).

FF2 1 BSSC 07 0 Hold (1-50) Hold

BSSC: ISDN Exchange Line Position
B=Cabinet no. 1-6
SS=Slot no. 01-12
C=Circuit no. 1-4 (BRI)
or 1 (PRI)

TRS Class No. 1-50 for Day Mode

default: 1

Notes:

Related Programming:

TRS Class (Night)

BSSC-071 :1
Night TRS CLS

(all CPCs) - Version 1.0 or higher

Assign a Toll Restriction Service (TRS) class to the ISDN Exchange Line, applicable during Night mode when the Exchange Line originates an outbound call (such as DISA).

FF2 1 BSSC 07 1 Hold (1-50) Hold

BSSC: ISDN Exchange Line Position
B=Cabinet no. 1-6
SS=Slot no. 01-12
C=Circuit no. 1-4 (BRI)
or 1 (PRI)

TRS Class No. 1-50 for Night Mode

default: 1

Notes:

Related Programming:

TRS Level for Non-ARS Routing FF6 1 00 (01-50) Hold (001-0099) Hold (0-9) Hold

Exchange Line COS

BSSC-08 :1
Trunk COS

(all CPCs) - Version 1.0 or higher

Assign a Class of Service (COS) to the ISDN Exchange Line.

FF2 1 BSSC 08 Hold (1-16) Hold

BSSC: ISDN Exchange Line Position
B=Cabinet no. 1-6
SS=Slot no. 01-12
C=Circuit no. 1-4 (BRI)
or 1 (PRI)

Trunk(=Exchange Line) Class of Service No. 1-16

default: 1

Notes:

This **Exchange Line COS** assignment is mainly used for netwark features (see **Exchange Line COS** definitions in FF1 0 04).

Related Programming:

FF1 0 04: Exchange Line Class of Service

Calling Number Area Code

BSSC-090 :
Area Code

(all CPCs) - Version 1.0 or higher

Assign a Calling Number Area Code to the ISDN Exchange Line.

FF2 1 BSSC 09 0 Hold (up to 6 digits) Hold

BSSC: ISDN Exchange Line Position
B=Cabinet no. 1-6
SS=Slot no. 01-12
C=Circuit no. 1-4 (BRI)
or 1 (PRI)

Calling Number Area Code
(max. 6 digits)

default: [no assignment]

Notes:

This **Calling Number Area Code** will be sent to the Exchange Line for outbound calls on the ISDN Exchange Line, along with other Calling Number digits (if assigned) in the following sequence:

Calling Number Area Code + Calling Number Office Code + Subscriber Number

Related Programming:

Calling Number Send FF2 1 BSSC 03 12 Hold (0 or 1) Hold

Calling Number Office Code

BSSC-091 : Office Code

(all CPCs) - Version 1.0 or higher

Assign a Calling Number Office Code to the ISDN Exchange Line.

FF2 1 BSSC 09 1 Hold (up to 6 digits) Hold

BSSC: ISDN Exchange Line Position
B=Cabinet no. 1-6
SS=Slot no. 01-12
C=Circuit no. 1-4 (BRI)
or 1 (PRI)

Calling Number Office Code
(max. 6 digits)

default: [no assignment]

Notes:

This **Calling Number Office Code** will be sent to the Exchange Line for outbound calls on the ISDN Exchange Line, along with other Calling Number digits (if assigned) in the following sequence:

Calling Number Area Code + Calling Number Office Code + Subscriber Number

Related Programming:

Calling Number Send FF2 1 BSSC 03 12 Hold (0 or 1) Hold

Calling Number Subscriber Number

BSSC-092 : Subscriber #

(all CPCs) - Version 1.0 or higher

Assign a Calling Number Subscriber Number to the ISDN Exchange Line

FF2 1 BSSC 09 2 Hold (up to 4 digits) Hold

BSSC: ISDN Exchange Line Position
B=Cabinet no. 1-6
SS=Slot no. 01-12
C=Circuit no. 1-4 (BRI)
or 1 (PRI)

Subscriber Number (max. 4 digits)

default: [no assignment]

Notes:

This **Calling Number Subscriber Number** will be sent to the Exchange Line for outbound calls on the ISDN Exchange Line, along with other Calling Number digits (if assigned) in the following sequence:

Calling Number Area Code + Calling Number Office Code + Subscriber Number

Related Programming:

Calling Number Send FF2 1 BSSC 03 12 Hold (0 or 1) Hold

Exchange Line Digital Pad Class

BSSC-10 :7
Trunk DPAD CLS

(all CPCs) - Version 1.0 or higher

Assign a Digital Pad Class to the ISDN Exchange Line.

FF2 1 BSSC 10 Hold (1-16) Hold

BSSC: ISDN Exchange Line Position
B=Cabinet no. 1-6
SS=Slot no. 01-12
C=Circuit no. 1-4 (BRI)
or 1 (PRI)

Trunk(=Exchange Line)
Digital Pad Class No. 1-16

default: 7

Notes:

Related Programming:

Digital Pad Setting for Exchange Line Pad Class FF1 8 02 (0001-0480) Hold (0-31) Hold

Extension Programming (FF3)

D-Channel Position

BSSC-000 : Shared Dch POS

(all CPCs) - Version 1.0 or higher

Identify the position of the common D-channel (if used) that will control the ISDN extension located on a 31B PRI card.

FF3 1 BSSC 00 0 Hold (BSSC) Hold

BSSC: ISDN Extension port Position
B=Cabinet no. 1-6
SS=Slot no. 01-12
C=PRI Circuit no. 1

Common D-Channel Position:
B=Cabinet no. 1-6
SS=Slot no. 01-12
C=Circuit no. 1-4 (BRI)
or 1 (PRI)

default: [no assignment]

Notes:

This address i sapplicable only if the system is using multiple PRI or BRI cards. Skip this address if using only the 30B+D card for PRI, or only one 2B+D card for BRI.

Related Programming:

D-Channel Interface ID Code FF3 1 BSSC 00 1 Hold (1-127) Hold

D-Channel Interface ID Code

BSSC-001 : Dch I/F ID Code

(all CPCs) - Version 1.0 or higher

When **ComonD-Channel** (see previous address) is used, identify the Interface ID code (supplied by the Central Office) that will be used for common D-channel control.

FF3 1 BSSC 00 1 Hold (1-127) Hold

BSSC: ISDN Extension port Position
B=Cabinet no. 1-6
SS=Slot no. 01-12
C=PRI Circuit no. 1

D-Channel Interface ID Code (max. 3 digits)

default: [no assignment]

Notes:

The **Common D-Channel** Position must be set for the port before this address can be entered. If **Common D-Channel** Position is cleared, this address will automatically be cleared also.

Related Programming:

Common D-Channel Position FF3 1 BSSC 00 0 Hold (BSSC) Hold

Connection Type

BSSC-0200 :0
Connection Type

(all CPCs) - Version 1.0 or higher

Choose the connection type for the ISDN extension.

FF3 1 BSSC 02 00 Hold (0 or 1) Hold

BSSC: Extension Port position
B=Cabinet no. 1-6
SS=Slot no. 01-12
C=Circuit no. 1-4 (BRI)
or 1 (PRI)

0=Point-to-Point (default)
1=Point-to-Multi-Point (BRI only)

Notes:

If set to ‘1” (Point-to-MultiPoint), you can parallel-connect up to 8 defferent ISDN-BRI devices. This is normally used with S-point DID.

Related Programming:

DID Dialing to ISDN ‘S” Point FF1 4 05 (0001-0192) Hold (setting) Hold
Called Number Indication FF3 1 BSSC 03 03 Hold (0 or 1) Hold

.

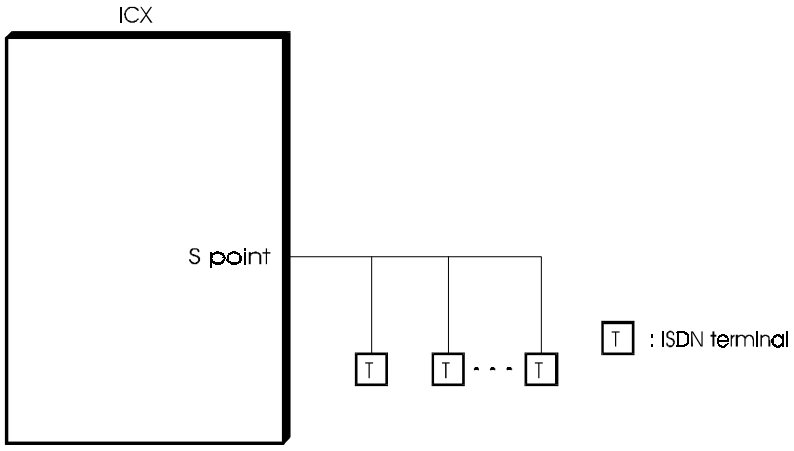

Passive Bus

BSSC-0201 :0
Passive Bus

(all CPCs) - Version 1.0 or higher

Set the distance between the phone system and a station or another system.
Controls voice level on the ISDN extension.

FF3 1 BSSC 02 01 Hold (0 or 1) Hold

BSSC: Extension Port position
B=Cabinet no. 1-6
SS=Slot no. 01-12
C=Circuit no. 1-4 (BRI)
or 1 (PRI)

0=Short Loop: 200m (default)
1=Long Loop: 1km

Notes:

Related Programming:

Layer 1 Operate Mode

BSSC-0202 :0
Operate Mode

(all CPCs) - Version 1.0 or higher

Set the ISDN detection method by the Central Office. (The Central Office should be contacted to match this detection method.)

FF3 1 BSSC 02 02 Hold (0 or 1) Hold

BSSC: Extension Port position
B=Cabinet no. 1-6
SS=Slot no. 01-12
C=Circuit no. 1-4 (BRI)
or 1 (PRI)

0=Active mode (default)
1=Passive mode
2=Activated per call

Notes:

If "**Active mode"(default)** is selected, PBX sillinform the Central Office of the existence of the ISDN extension when PBX power is turned on.

If 'Activated per call" is selected, system will inform the Central Office of the existence of the ISDN extension when the extension makes an outgoing call, or the system detects an incoming call.

Related Programming:

B-Channel Select

BSSC-0300:0
Bch Select

(all CPCs) - Version 1.0 or higher

Set the method used by the system to seize a B-channel for an outgoing call.

FF3 1 BSSC 03 00 Hold (0 or 1) Hold

BSSC: Extension Port position
B=Cabinet no. 1-6
SS=Slot no. 01-12
C=Circuit no. 1-4 (BRI)
or 1 (PRI)

0=System will search for highest-numbered B-channel; system cannot change channel. (default)

1=System will search for lowest-numbered B-channel; system can change channel by request from ISDN terminal equipment.

Notes:

Related Programming:

B-Channel Numbering (Layer 3)

BSSC-0301 :1
Bch MAP

(all CPCs) - Version 1.0 or higher

Select the Layer 3 format of the messaging commands sent by the system/PBX to the ISDN device.

FF3 1 BSSC 03 01 Hold (0 or 1) Hold

BSSC: Extension Port position
B=Cabinet no. 1-6
SS=Slot no. 01-12
C=Circuit no. 1-4 (BRI)
or 1 (PRI)

0=Slot Mapping

1=Channel Numbering (default)

Notes:

When ordering span from Central Office, specify **Slot Mapping** or **Channel Numbering**

Choose **Slot Mapping** for multirate (64kbps base rate) bearer capability on a Primary Rate Interface, when you want to combine channels toghther -- for example, using many channels to provide a larger bandwidh for video-conferencing.

Choose **Channel Numbering** when the information transfer rate is 64 kbps, and the channels on the span are used as single channels. For example, specify to Exchange Line:

:

Call ID Length

BSSC-0302 :0
Call ID Length

(all CPCs) - Version 1.0 or higher

Set the ID method by which the system/PBX flags messages sent to the ISDN PRI equipment for calls.

FF3 1 BSSC 03 02 Hold (0 or 1) Hold

BSSC: Extension Port position
B=Cabinet no. 1-6
SS=Slot no. 01-12
C=Circuit no. 1-4 (BRI)
or 1 (PRI)

0=1 byte/octet (default for BRI)
1=2 bytes/octets (default for PRI)

Notes:

"1 byte/octet" rotates from 1 to 127 IDs. "2 bytes/octets" rotates from 1 to 32,767 IDs.

Related Programming:

Called Number Indication

-0311 :0
Called # INFO

(all CPCs) - Version 1.0 or higher

For incoming calls, set whether the system will send the called party's number to the ISDN terminal.

FF3 1 BSSC 03 03 Hold (0 or 1) Hold

BSSC: Extension Port position
B=Cabinet no. 1-6
SS=Slot no. 01-12
C=Circuit no. 1-4 (BRI)
or 1 (PRI)

0=No called-number indication. (default)
1=Called-number indication.

Notes:

This must be set to '1' (called-number indication) when using S-point DDI (parallel connection).

Related Programming:

DID Dialing to ISDN 'S" Point FF1 4 05 (0001-0192) Hold (setting) Hold
COnnection Type (ISDN extension) FF3 1 BSSC 02 00 Hold (0 or 1) Hold

Called Sub-Address Indication

BSSC-0304 :0
Sub-Address INFO

(all CPCs) - Version 1.0 or higher

For incoming calls, set whether the PRI/BRI card will send the sub-address that identifies the originating terminal, to the ISDN extension.

FF3 1 BSSC 03 04 Hold (0 or 1) Hold

BSSC: Extension Port position
B=Cabinet no. 1-6
SS=Slot no. 01-12
C=Circuit no. 1-4 (BRI)
or 1 (PRI)

0=No sub-address indication. (default)

1=Sub-address indication.

Notes:

ex1:

Normal Connection

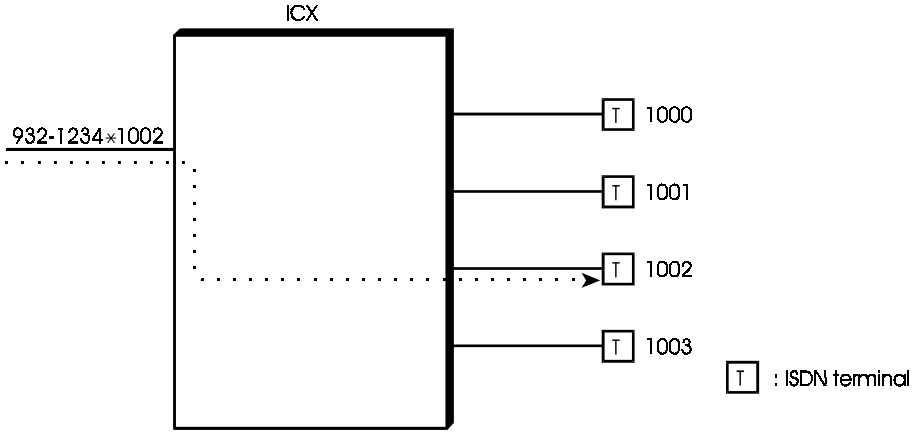

ex2:

Behind PBX Connection

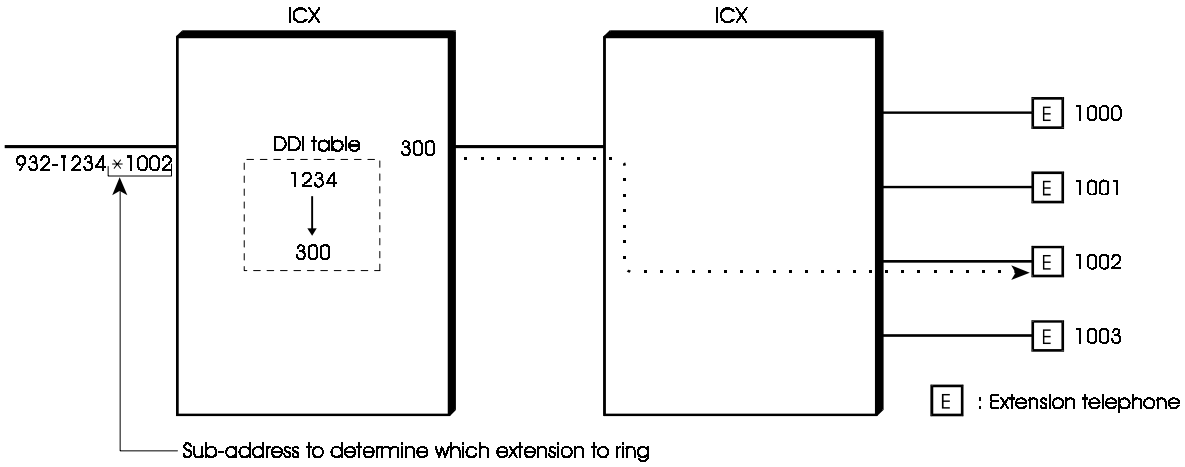

ex3:

Point to Multi-point Connection (Rarely used)

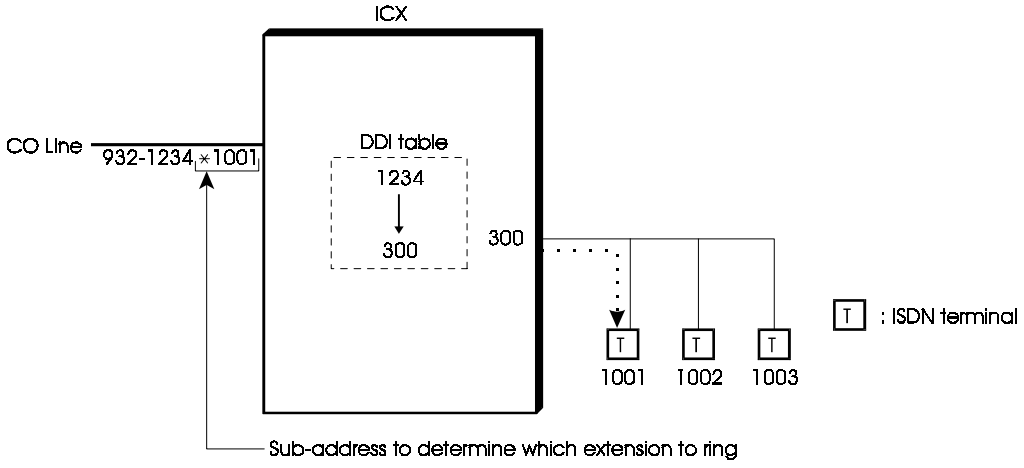

Progress Tone

BSSC-0306 :1
Progress Tone

(all CPCs) - Version 1.0 or higher

Set whether the system will send progress tones indicating call status (e.g., ringback tone, busy tone) to the analog terminal connected to the ISDN extension.

FF3 1 BSSC 03 06 Hold (0 or 1) Hold

BSSC: Extension Port position
B=Cabinet no. 1-6
SS=Slot no. 01-12
C=Circuit no. 1-4 (BRI)
or 1 (PRI)

0=Do not send progress tones.
1=Send progress tones. (default)

Notes:

Related Programming:

Data Security

BSSC-0307 :0
Data Security

(all CPCs) - Version 1.0 or higher

Set whether to allow interruptions such as Busy Override-Receive at the analog terminal connected to the ISDN Extension.

FF3 1 BSSC 03 07 Hold (0 or 1) Hold

BSSC: Extension Port position
B=Cabinet no. 1-6
SS=Slot no. 01-12
C=Circuit no. 1-4 (BRI)
or 1 (PRI)

0=Data Security OFF; interruptions are allowed. (default)

1=Data Security ON; do not allow interruptions.

Notes:

Related Programming:

Tenant Group Assignment

BSSC-04 :1
Tenant Group

(all CPCs) - Version 1.0 or higher

Assign the ISDN extension to a Tenant Group. This is the ring assignment for incoming calls.

FF3 1 BSSC 04 Hold (1-72) Hold

BSSC: Extension Port position
B=Cabinet no. 1-6
SS=Slot no. 01-12
C=Circuit no. 1-4 (BRI)
or 1 (PRI)

Tenant Group No. 1-72 (maximum depends on system size)

default: 1

Notes:

Available range for Tenant Groups depends on system size:

96-port system: Tenant Groups 1-12
192-port system: Tenant Groups 1-24
288-port system: Tenant Groups 1-36
384-port system: Tenant Groups 1-48
480-port system: Tenant Groups 1-60
576-port system: Tenant Groups 1-72

Tenant Groups can be used for controlling the extension's MCO access and SSD block assignment.

Tenant Groups cannot be assigned to individual channels; instead, they are assigned by PRI- or BRI-line basis.

Related Programming:

MCO Exchange Line Groups (Incoming Calls) FF1 3 03 (0001-0072) Hold (1-99) Hold
SSD Block Assignment to MCO Tenant Groups FF1 0 15 (0001-0072) Hold (0-72) Hold

TRS Class (Day)

BSSC-050 :1
Day1/2 TRS CLS

(all CPCs) - Version 1.0 or higher

Assign a Toll Restriction Service (TRS) class to the ISDN extension, applicable during Day1 and Day2 modes.

FF3 1 BSSC 05 0 Hold (1-50) Hold

BSSC: Extension Port position
B=Cabinet no. 1-6
SS=Slot no. 01-12
C=Circuit no. 1-4 (BRI)
or 1 (PRI)

TRS Class No. 1-50 (Day)

default: 1

Notes:

Related Programming:

TRS Level for Non-ARS Routing FF6 1 00 (01-50) Hold (0001-0099) Hold (0-9) Hold
TRS Level for ARS Routing FF6 1 01 (01-50) 0001 Hold (0-9) Hold

TRS Class (Night)

BSSC-051 :1
Night TRS CLS

(all CPCs) - Version 1.0 or higher

Assign a Toll Restriction Service (TRS) class to the ISDN extension, applicable during Night mode.

FF3 1 BSSC 05 1 Hold (1-50) Hold

BSSC: Extension Port position
B=Cabinet no. 1-6
SS=Slot no. 01-12
C=Circuit no. 1-4 (BRI)
or 1 (PRI)

TRS Class No. 1-50 (Night)

default: 1

Notes:

Related Programming:

TRS Level for Non-ARS Routing FF6 1 00 (01-50) Hold (0001-0099) Hold (0-9) Hold
TRS Level for ARS Routing FF6 1 01 (01-50) 0001 Hold (0-9) Hold

Extension COS Assignment

BSSC-06 :1
Extension COS

(all CPCs) - Version 1.0 or higher

Assign a Class of Service (COS) to the ISDN extension.

FF3 1 BSSC 06 Hold (1-16) Hold

BSSC: Extension Port position
B=Cabinet no. 1-6
SS=Slot no. 01-12
C=Circuit no. 1-4 (BRI)
or 1 (PRI)

Extension COS No. 1-16

default: 1

Notes:

Based on this **Extension COS Assignment,** extension features can be enabled/disabled.

Related Programming:

FF1 0 03: Extension Class of Service

Extension Digital Pad Class

BSSC-070 :5
EXT DPAD CLS

(all CPCs) - Version 1.0 or higher

Assign a Digital Pad Class to an ISDN extension.

FF3 1 BSSC 07 Hold (1-8) Hold

BSSC: Extension Port position
B=Cabinet no. 1-6
SS=Slot no. 01-12
C=Circuit no. 1-4 (BRI)
or 1 (PRI)

Extension Pad Class No. 1-8

default : 5

Notes:

This Digital Pad Class assignment can be used for controlling volume adjustments between the extension and other extensions, Exchange Lines, conference calls, etc. (To set these volume adjustment levels, see **Digital Pad Settings.)**

Related Programming:

FF1 8: Digital Pad Settings

Dial Plan Assignment

BSSC-08 :1
Dial Plan PTN

(all CPCs) - Version 1.0 or higher

Assign a Dial Plan to the ISDN extension.

FF3 1 BSSC 08 Hold (1 or 2) Hold

BSSC: Extension Port position
B=Cabinet no. 1-6
SS=Slot no. 01-12
C=Circuit no. 1-4 (BRI)
or 1 (PRI)

1=Dial Plan Pattern "A"(default)
2=Dial Plan Pattern "B"

Notes:

The phonesystem supports two Dial Plans, each with a programmable set of Flexible Feature Codes.

Related Programming:

FF1 2: Dial Plan

Maintenance Programming (FF8)

Card Reset

BSS : Card Status

(all CPCs) - Version 1.0 or higher

Resets a card if the system cannot communicate with it.

FF8 0 04 0 BSS Hold (0 or 1) (FL/R + Hold)

BSS: Card Position
B=Cabinet no. 1-6
SS=Slot no. 01-12

0=Not installed or idle (no communication)
1=Installed and Busy

press FL/R* and Hold simultaneously)
*Not available for FL/R programmed via FF-key.

Notes:

When you reset a card, the system will display the next card. You can then reset the card that is in the free slot.

(Even if the display shows that “0” (is not installed or idle), you can reset the card)

In case of TRK card, to display “1” (Installed and Busy) is available.

In case of Ext. card, only ’0’ (in any status) is available to show.

ISDN Channel Lockout

1041-01 : CH01 Lockout

(all CPCs) - Version 1.0 or higher

Enables/disables the lockout of ISDN on the channel base.

FF8 0 06 BSSC (0-3) Hold CONF... (0-1) Hold

BSSC: ISDN Channel Position
B=Cabinet no. 1-6
SS=Slot no. 01-12
C=1 (PRI)
C=1-4 (BRI)

0=channels 1-6
1=channels 7-2
2=channels 13-18
3=channels19-24
4=channels 25-30
5=channels 31-32

(see table in next page)

0=Unlock (default)
1=Lockout

Table 4-2. ISDN Channel Lockout addresses

Address	**Channel No.**	
FF8 006 (BSSC) 0 Hold CONF	Channel 1	
FF8 006 (BSSC) 0 Hold CONF Hold	Channel 2	
FF8 006 (BSSC) 0 Hold CONF (Hold x2)	Channel 3	
FF8 006 (BSSC) 0 Hold CONF (Hold x3)	Channel 4	
FF8 006 (BSSC) 0 Hold CONF (Hold x4)	Channel 5	
FF8 006 (BSSC) 0 Hold CONF (Hold x5)	Channel 6	
FF8 006 (BSSC) 1 Hold CONF	Channel 7	
FF8 006 (BSSC) 1 Hold CONF Hold	Channel 8	
FF8 006 (BSSC) 1 Hold CONF (Hold x2)	Channel 9	
FF8 006 (BSSC) 1 Hold CONF (Hold x3)	Channel 10	
FF8 006 (BSSC) 1 Hold CONF (Hold x4)	Channel 11	
FF8 006 (BSSC) 1 Hold CONF (Hold x5)	Channel 12	